OPERATING AND INSTALLATION INSTRUCTIONS

SCAN-LINE 805 AQUA

Approved for use in smoke control areas when burning dry wood logs or authorised fuels



www.hetaheating.com

GB

DANISH DESIGN . DANISH QUALITY . DANISH PRODUCTION

Congratulations on your new wood stove insert, we are confident that you will be more than satisfied with your new Heta stove. Especially if you follow the following advice and instructions.

Scan-Line 805 Aqua is approved according to EN 13240, 15 a B-VG, NS 3058/3059. These approvals, means that the wood stove insert meets a variety of specifications and requirements, ensuring it is made of quality materials, minimum environmental impact and that it has an optimum fuel economy.

The above declared values apply to all variants of the Scan-Line 805 Aqua series.

Operating Instructions Contents

Before installation 3-4
1. Operating instructions 5
1.1 Before using 5
1.2 First firing 5
1.3 Regulating the airflow 5
1.4 Lighting the stove 5
1.5 Refueling 5
1.6 Emptying the ash 6
1.7 Reduced burning 6
1.8 Risk of explosion 6
1.9 Draft conditions in the chimney 7
1.10 Fuel 8
1.11 Operating problems 8
1.12 Chimney fire 8
1.13 Maintenance 9
1.14 Cleaning the glass 9
1.15 Diagram for maintenance 9
1.16 Troubleshooting 10
1.17 Stove data table EN 13240 11
1.18 Garantee 11
1.19 Cleaning/Replacing bicks after chimney sweeping 12
1.20 Removal of plates between the cooling pipes and cleaning of cooling pipes 13
1.21 Parts 14-15
3. Installation Instructions 17

Heta A/S
Jupitervej 22,
DK-7620 Lemvig
Phone: +45 9663 0600
E-mail: heta@heta.dk

Copyright © 2014
Heta is a registered
trademark of Heta A/S

Printed in Denmark
Subject to printing errors
and changes.

12.10.2026
0037-1385 Version 3,1

BEFORE INSTALLATION

Heta wood stoves are quality products, therefore, your first impression is very important! We have a good logistics network, which transports Heta products with great care for our dealers. Nevertheless, when in transport or handling, damage of the often-heavy stoves can occur. It is important that upon receipt check your Heta product completely and report any damage or defects to your dealer.

The packaging must be disposed of as follows:
Wood is untreated and able to burn in the stove.
Plastic and cardboard you can drop off at your local recycling center.

Unpacking the stove

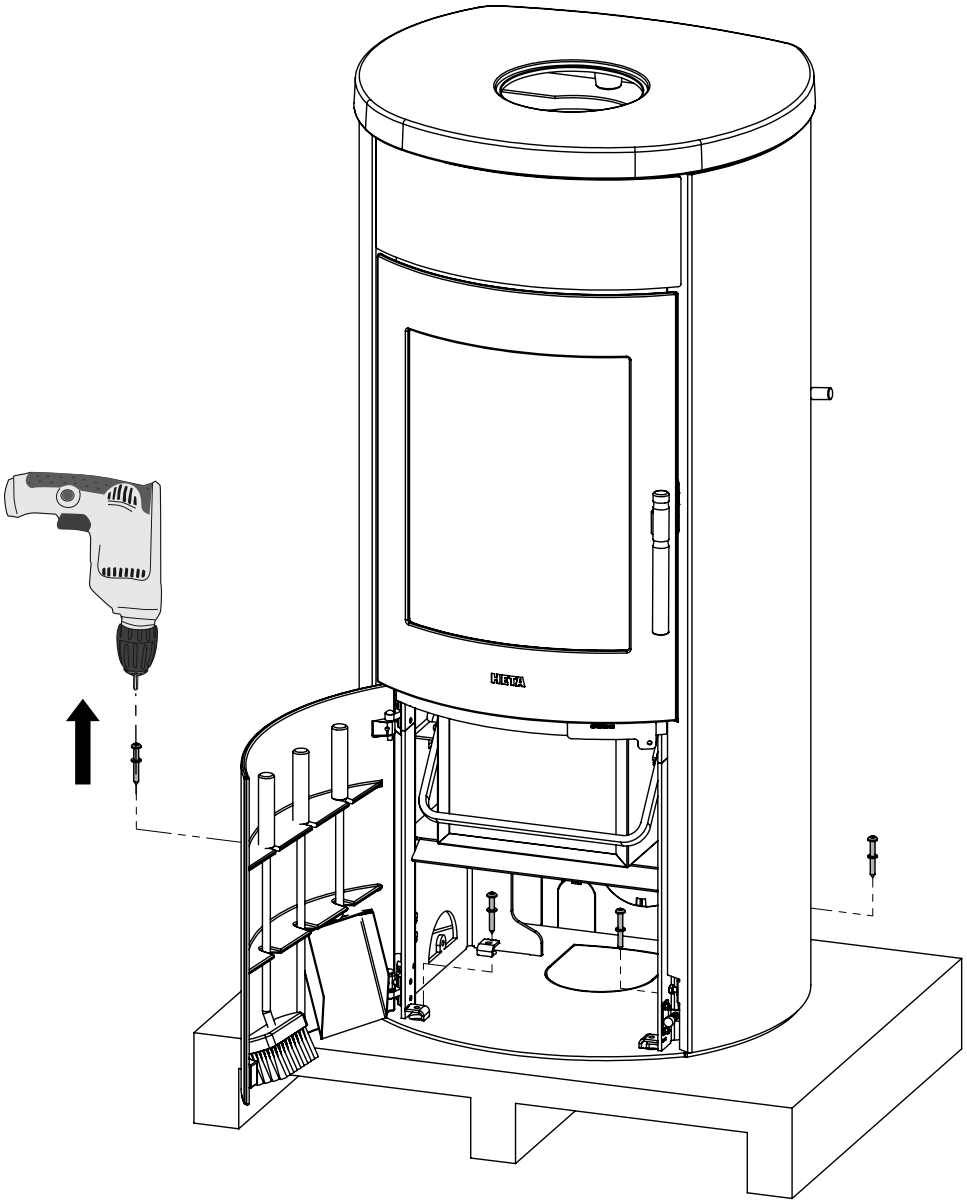

With your new wood stove you should find the following:

Operating / Instruction manual	
Heta glove Nr. 0023-9002	
Tool set	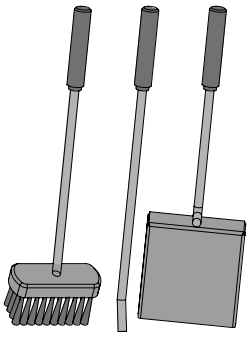

Q.C. check	
Data plate	
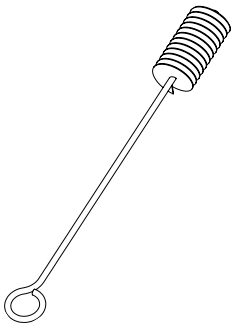	Cleaning brush Nr. 5020-0018

Required tools are not supplied.

Accessory

Aqua performance kit
Nr. 5032-0024

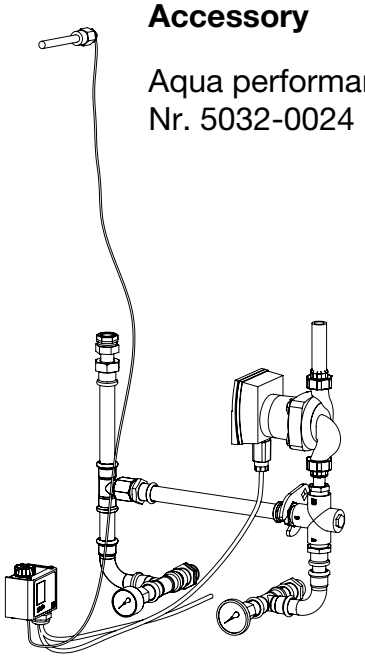

1. OPERATING INSTRUCTIONS

1.1 Before using

Before the wood stove is used make sure required installation conditions, are met. See page 17.

1

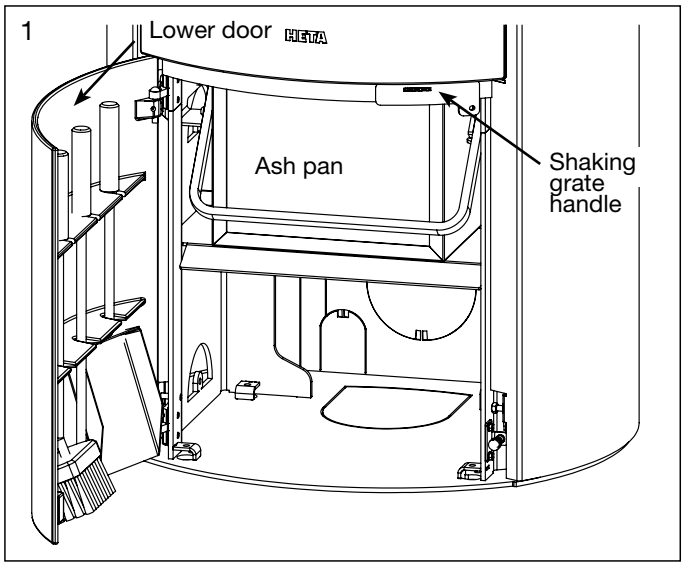

1.2 First firing

The stove paint is fully cured from the factory, but a minor unpleasant odour could still arise.

1.3 Airflow regulation

To adjust combustion airflow, use the handle on the side (towards the rear). There is maximum combustion airflow in when the handle is in the top position (fig. 2). Reduce combustion airflow gradually by lowering the handle. When the handle is in the lowest position (fig. 3), combustion airflow is completely closed.

Fig. 2



Fig. 3



The SL805 Aqua stoves are designed and tested to burn extremely cleanly with very little smoke discharge and are exempt for use in smoke control areas throughout the UK when burning dry wood logs. To comply, a permanent stop is fitted to ensure that the air control slider cannot be closed beyond 52% of its fully open position. A permanent amount of air will therefore enter the firebox to feed the fire producing negligible amounts of smoke and unburnt hydrocarbons. The appliances will only be considered as an exempt appliances if this stop is in place.

1.4 Lighting the stove

Place two pieces of wood on the bottom. Stack kindling on top in layers with air between. Set ting fire starter (bag, brick, paraffin) on the top, now you are ready to light the fuel. The flames must work from the top down. Fig. 4.

4



The use of lighter fluid, oils or any liquid fuels is strictly forbidden from use in a wood stove.

Fully open the combustion air and leave the door ajar (about 1 cm open).

Once the fire is established and the chimney is hot (after about 3-5 minutes) closed door and regulate the air into operating position. We recommend, all of the first fuel is burned with the combustion air fully open in the operating position. This ensures the stove and chimney are thoroughly heated.

Startup/Lighting
Scan the code and select a language.

1.5 Refueling

Refueling of your stove should be done while there is still a good layer of embers. You should therefore air well when using the stove for the first time.

Spread the embers over the base grate, with most towards the front of the stove. Place fi-

rewood equivalent to 1.92 kg (on top of the embers in one layer, perpendicular to the chamber opening. See fig. 5.

5



Now open the combustion air completely. If the stove and/or chimney cools down too much, it may be necessary to have the door ajar. The wood will then ignite within a very short time (Typically 1 to 3 minutes). Once the fuel is Ignited. Close the door and regulate the air back to operating air. When the fire is well established, you can now regulate the operating air to the desired combustion level.

Nominal operation 8.7 kW corresponds to 70% combustion airflow.

The door must be closed during operation.

When adding fuel, make sure that the fuel is not too tightly packed, as this will lead to poorer combustion and fuel inefficiency.
Never fill firewood over the stove's max. fill line. See fig. 6.

6



When refueling be careful to place the fuel into the combustion chamber gently, (use the provided glove). By not doing so you risk cracking or breaking the vermiculite.

If there is reduced draft in the chimney, we recommend opening a window at stoking. This will give better ventilation to the room and more oxygen for combustion.

When refueling a maximum load of wood may not eceed 2,3 kg. If this amount is exceeded, the guarantee will be void.

1.6 Emptying the ash

By using the shaker grate, it rotates back and forth so the ash falls through the holes and into the ashtray. It is advantageous to leave a layer of ash in the bottom of the combustion chamber on top of the grate as insulation

Be careful when emptying the ashes out. There can be hot embers left for a long time. Never empty ash into a combustible container.

The ashtray must be secure and must not be able to move after being set in place. Do not fire in the oven if the ashtray is not in place. The warranty is void if it is not complied with.

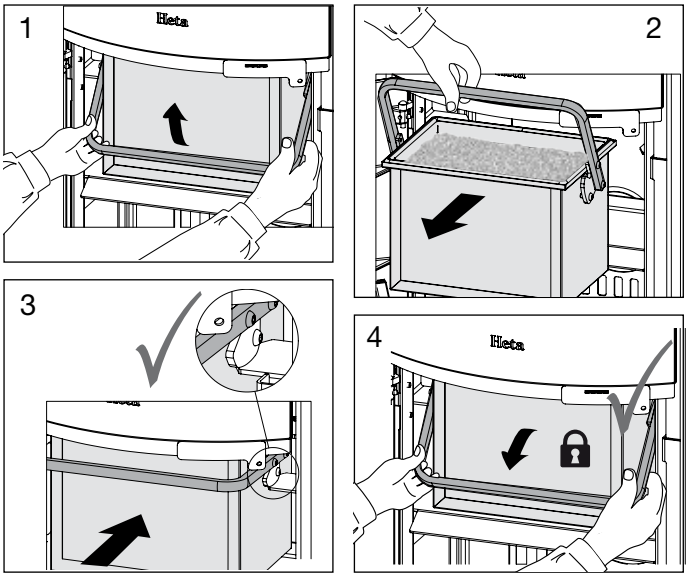

1.7 Reduced burning

The stove is, approved for intermittent use.

Never turn down the air down so much that there does not come any flames from the tree. Wait to close the air until the flames haveburnt out and the tree is transformed into glowing charcoal.

If you are looking for less heat out-put, achieve this by fueling with smaller volumes of wood and a lower operating air. You may not completely close the operating air during firing.

Be aware that the stove will naturally soot if the operating air is too low. This is not good for the

environment. There is also a risk for the glass, the chimney and other parts will become sooted.

By a combination of the above and possibly burning damp wood. Can lead to high levels of soot that it becomes sticky. Causing the sealing of the door to tear off when opening the door the next day.

Never use the stove if the seals are loose.

1.8 Risk of explosion

After you add new fuel, it is very important that you do not leave the stove unattended until the wood is burning constantly.

This will normally occur within 30 to 60 seconds. A risk of explosion can possibly arise if too much wood is placed in the stove. This may result in the production of large volumes of gas, and this gas can explode if the intake of primary and secondary air is insufficient.

Warning!

One must always use cation around the stove seen, as it gets very warm during use. (In excess of 90° C).

Children should avoid contact with the stove.

Setting up a fence if you have small children may be necessary.

Do not place flammable objects like drying racks, furniture, curtains too close to the stove.

1.9 Draft conditions and the chimney

Poor draft will not allow the stove to burn, as it should. The glass can soot, requires cleaning of the chimney more often, smoke can escape out when the door is open and it gives poor fuel efficiency. Leading to unnecessary polluting of the environment.

Good draft will allow the stove to achieve optimal combustion and the highest possible efficiency. Heta wood stoves are constructed so that it itself provides an optimal blend of combustion air. This provides a high efficiency/heat, clean glass and low environmental impact.

Minimum chimney draft: 12 PA for Scan-Line 805 Aqua. It is the draft that the stove has been tested and approved on. The minimum draft is necessary to provide clean burning, beautiful flame picture, as well as achieving the rated efficiency.

There is a risk of smoke escaping into the room if the door is opened during vigorous firing, or if there is a lack of air supply to the room, for ex. if an extraction fan is in use.

Nominal fluegas temperature: 182°C relative to 20°C. Flue gas flow is: 6.6 g/sec. Corresponding to 23.7 m³ / hr of combustion air by burning 1.92 kg of wood.

The chimney height and diameter, as well as the temperature difference between the flue gas and outside temperature generates the chimney draft. Chimney insulation is therefore important as new efficient stoves create lower flue temperatures. Wind and weather conditions also influence draft, in some cases it may be disadvantageous wind direction, combined with the position of the chimney can cause negative draft (it blows through the chimney), causing smoke escape from the stove.

Before using after a long period of inactivity, check that the chimney is free for any blockages. (soot build-up, bird nests, leaves etc.).

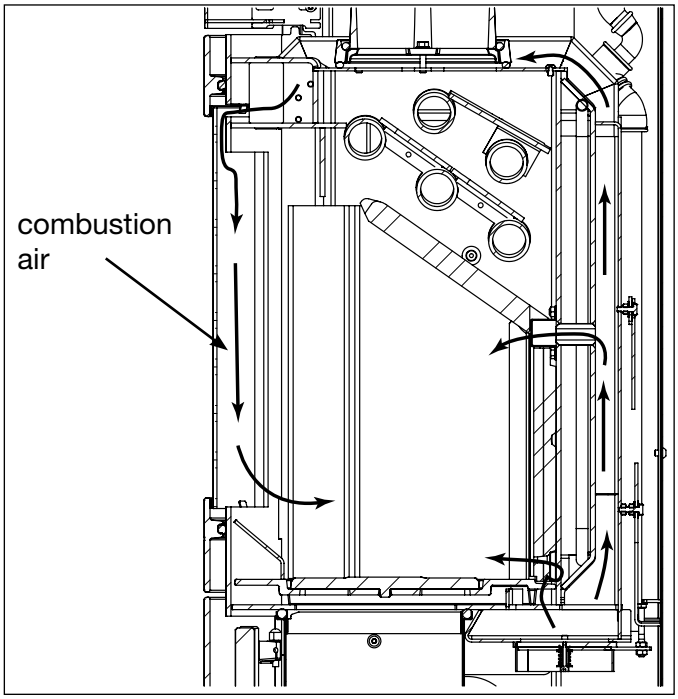

Reduced draft can occur when:

- The temperature difference is too small between smoke gasses and outdoor temperature, for eg. poorly insulated chimney
- To short of a chimney
- The outside temperature is high, and indoor temperature is low for eg. in summer

- False air in the chimney
- Chimney is blocked
- Air tight house (lack of combustion air supply)
- Poorly placed chimney for the surroundings, for ex. the ridge and trees may cause turbulence

Good draft occurs when:

- The difference in temperature in the chimney (warmer) and outside temperature (colder)
- It is clear weather
- The chimney has the right height min 4 meters above the stove, and clear of the roof ridge.

1.10 Fuel

Your new stove is EN approved for firing with wood fuel. You must therefore only burn clean, dry wood in your stove. Never use your stove to burn driftwood, as this may contain a lot of salt which can damage both the stove and the chimney. Similarly, you must not fire your stove with refuse, painted wood, pressure-impregnated wood or chipboard, as these materials can emit poisonous fumes and smoke.

Correct firing using well seasoned wood provides optimal heat output and maximum efficiency. At the same time, correct firing prevents environmental damage in the form of smoke emissions and reduces the risk of chimney fires.

If the wood is damp and inadequately seasoned, a large proportion of the energy in the fuel will be used to vaporize the water and this will all disappear up the chimney. Thus, it is important to use dry, well seasoned wood, for eg. wood with a moisture content of less than 20 %. Achieve this by storing the wood for 1–2 years before use.

Pieces of firewood with a diameter of more than 10 cm should be split before before storing. The pieces of firewood should be of an appropriate length (approx. 20 cm) so that they can lie flat on the bed of embers.

If you store your wood outdoors, it is best to cover it.

Heating value in wood

You have to use about 2.4 kg normal wood to replace one litre of heating oil. All woods have almost the same heating value per kg, which is about 5.27 kW/hour for absolute dry wood. Wood with a moistness of 18% has a efficiency of about 4.18 kW / hour per kg, and one litre heating oil contains about 10 kW / hour.

Examples of fuel values

for different woods and their typical densities per cubic meter, specified for 100% wood with a moisture content of 18%.

Wood	kg/m^3	Wood	kg/m^3
Beech	710	Willow	560
Oak	700	Alder	540
Ash	700	Scotch pine	520
Elm	690	Larch	520
Maple	660	Lime	510
Birch	620	Spruce	450
Mountain pine	600	Poplar	450

It is advised not to use oil-containing woods like teak tree and mahogany, as this can cause damage to the glass.

CO_2 release

At combustion 1000 litres of heating oil forms 3.171 tons CO_2. As wood is a CO_2 neutral heat/energy source, you save the environment about 1.3 kg CO_2 every time you have used 1 kg normal wood.

1.11 Operational problems

The chimney must be swept at least once a year, we recommend the use of a NACS (national association of chimney sweeps) registered chimney sweep.

In the event of smoke or malodorous fumes are being produced, you must first check to see whether the chimney is blocked.

The chimney must, of course, always provide the minimum draft necessary to ensure that it is possible to regulate the fire. Please note, how-ever, that chimney draft is dependent on the weather conditions. In high winds, the draft can become so powerful that it may be necessary to fit a damper in the flue gas pipe to regulate the draft.

When cleaning the chimney, soot and other deposits may come to fall on the baffle plate, remove and clean it. In cases where the wood burns too quickly, this may be due to excessive chimney draft. You should also check to make sure that the door seal and ash pan seal is intact and correctly fitting. If the stove it generating too little heat, this may be because you are firing with wet wood. In this case, much of the heating energy is used to dry the wood, resulting in poor efficiency, potentially damaging the vermiculite and an increased risk of soot deposits in the chimney.

1.12 Chimney fire

In case of a chimney fire, which often results from incorrect operation/maintenance or prolonged use of damp wood, close the door and the air supply completely, to help slow/smother the fire.

Call the fire department. The stove and chiminey must be inspected before use again.

1.13 Maintenance

The surface of the stove is treated with a heat-resistant paint. The stove should be cleaned with a damp cloth.
Any damage to the surface in the form of chips or scratches can be repaired using touch-up paint, which is available in spray can

1.14 Cleaning the glass

Incorrect firing, for example using wet wood, can result in the viewing window becoming covered in soot.
This can be removed easily and effectively using glass cleaner applied using a cloth.

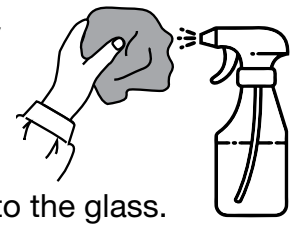

Never apply spray directly to the glass.

Lubricate Ash pan

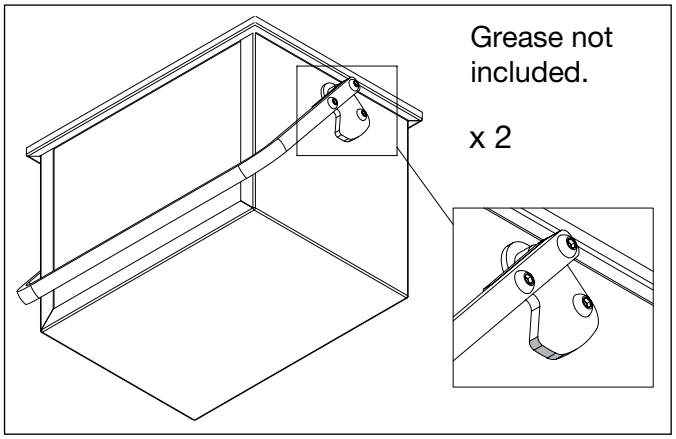

1.15 Diagram for the maintenance

	Stove Owner					Qualified Technicia	
Maintenance / Period	Before Autum	Daily	1 week	30 days	60-90 days	1st Year	2st Year
Cleaning the chimney (see. Chimney)	C						
Cleaning the chimney and stove	C				C		
Cleaning the stoves firebox	C	VI			C		
Cleaning combustion air intake	C				C		
Cleaning ash bucket	C		VI	C			
Cleaning of the firebox	C		VI	C			
Checking / switch, gasket for door	C/S	VI					C/S
Checking / changing, gasket for glass	C/S	VI					C/S
Checking / switch, gasket for ashpan	C/S	VI					C/S
Checking / changing gasket for flue pipe	C/S	VI					C/S
Checking / changing vermiculite	C/S	VI					C/S
Lubricate hinges	L	VI			L		
Lubricate lock	L	VI			L		
Lubricate Ash pan	L				L		

C = Cleaning
L = Lubricate whit graphite spray
C/S = Checking / Switch
VI = Visual Inspection, pos. cleaning/replacing/adjusting

1.16 Troubleshooting table - applies to all stove types

Fault	Cause	Troubleshooting	Solution
Lighting problems. When the stove is cold, smoke seeps into the room. Once the combustion chamber has heated up, the stove burns well.	Inadequate chimney draft. The chimney only has sufficient draft when it is hot.	You can test using a lighter whether flame is drawn into the combustion chamber.	Improve the chimney.
The stove burns poorly after the warm-up phase, and the glass slowly soots up.	Soot in the flue pipe.	Check the flue pipe regularly, as the problem arises slowly.	Clean regularly, and limit the use of horizontal flue pipes. Do not use firewood which generates large quantities of ash.
If the stove burns poorly after start-up, and the glass slowly soots up.	Inadequate chimney draft.	The fault usually already occurs during lighting. Measure the chimney draft.	Improve the chimney draft.
	Insufficient air supply.	Check the air supply.	Read the operating instructions and instruct all users.
	Damp wood.	Use clean, dry wood with a maximum moisture content of 20%.	Firewood should ideally be dried for at least one year after splitting.
	Firewood pieces too large.	Optimal size – see the section for firewood, max. diameter 10 cm.	Use smaller pieces of firewood.
	Insufficient air supply to the room. Range hoods, airtight windows, etc.	Ensure there is sufficient fresh air supply, open a window, check the outdoor air supply.	Depending on the cause, windows must be opened or the outdoor air connection cleaned.
	Insufficient air supply to the room. Range hoods, airtight windows, etc	Ensure there is sufficient fresh air supply, open a window, check the outdoor air supply.	Depending on the cause, windows must be opened or the outdoor air connection cleaned.
The vermiculite in the combustion chamber is becoming very worn.	Wood and flue gases wear down the vermiculite.	Investigate whether the wear is normal.	Normal wear and minor cracks are of no significance. It should be replaced when the steel of the combustion chamber is visible.
Too rapid combustion.	Too much chimney draft.	To test, you can open the cleaning hatch, but remember to close it again.	Measure the chimney draft and install a damper in the flue pipe if necessary.
	The door or ash pan/drawer seal is defective.	While cold, close a piece of paper in the door – the seal should hold the paper gently in place so it does not fall out by itself. Normal wear.	Replace the seal.
The vermiculite in the combustion chamber is cracked.	Shocks or impacts while adding firewood.	Normal wear	Cracks only have cosmetic significance. Replace when the steel of the combustion chamber is visible.
Steel surfaces in the combustion chamber have oxidised.	The temperature in the combustion chamber is too high.	Unsuitable fuel is being used (such as coal). Check the quantity of firewood being used, read the operating instructions.	If there are clear cracks or weaknesses in the stove body, it must be replaced.
The stove whistles	Too much chimney draft	To test, you can open the cleaning hatch, but remember to close it again.	Install a damper.
The stove 'clunks'	Usually due to tension in the metal plates.	Generally only occurs while heating up and cooling down.	Adjust the metal plates.
The stove ticks	Normal expansion and contraction due to temperature changes.	A normal sound.	Ensure that the temperature in the combustion chamber is as constant as possible.
The stove creaks.	The temperature in the combustion chamber is too high.	Use less firewood. Also check the seal in the ash pan/drawer.	See the operating instructions.
The stove smells. The surface is steaming.	The paint on the stove surface is not yet fully hardened.	See the operating instructions regarding the first firing.	Ensure there is sufficient ventilation.
Condensation in the combustionchamber.	Moisture in the vermiculite.	Check the condition of the vermiculite.	Evaporates by itself after the stove has been lit a few times.
	Damp wood.	Measure the moisture content.	Use dry firewood.
Condensation from the flue pipe.	The pipe is too long or the chimney is too cold.	Check the flue pipe's length and heat loss.	Improve the flue pipe, insulate the chimney.
	Damp wood	Measure the moisture content.	Use dry firewood.
Moving parts creak.	Needs lubercation.	What part.	Lubercate with graphite spray.

1.17 Stove data table in accordance with EN 13240 testing

Ovn type Scan-Line	Nominal fluegas temperature, at 20°C room temperature C°	Smoke stub mm	Fuel volume kg	Draught min mbar	Nominal output tested kW	Output to water kW	Output to the room kW	Output to water %	Output to the room %
805 Aqua	182	ø150	1,92	0,12	8,7	5,6	3,1	64	23

Ovn type Scan-Line	Maximal operation pressure bar	Water contence of the boiler litres	Efficiency %	Distance to flammable materials in mm		Distance to furnitures from the stove mm	Stove weight kg
				behind the stove	at the stoves		
805 Aqua	4	14	87	22	175	750	*

* Scan-Line 805 Aqua Standard 218 kg
* Scan-Line 805 Aqua full stone 300 kg
* Scan-Line 805 Aqua stone top 250 kg

The nominal output is the output to which the stove has been tested.
The test was carried out with the secondary air 70% open.

1.18 Guarantee

Heta wood stoves, are subjected to a strict quality control during production and before delivery to the dealer. Therefore, the duration of the warranty is **5 years** on this product, covering manufacturer's defects, **2 years** on electronic components**.** In addition, there is a **3-month** goodwill warranty, on gaskets, vermiculite and glass from the date of sale from the shop. Photos of the damaged parts must be sent for review.
Claims concerning stoves older than **3 months**, will be assessed by our quality team on a one-by-one basis. Report all claims to your approved / authorised HETA dealer, who in turn will contact Heta to solve the claim. Any stoves purchased online or via a 3rd party carry a standard 1-year warranty with engineer visits & parts being chargeable. To file a claim please provide date of installation, picture of the silver data sticker, model and a description of the issue and pictures.

The guarantee does not cover:

- Wearing parts / fragile parts such as:
- Vermiculite elements in the combustion chamber.
- Glass
- Seals
- The cast bottom or shaking grate
- Surface or paint deteriorations due to excessive humidity, salinity or other aggressive environment
- Damage caused by improper use
- Transportation costs for warranty repair
- Assembly / disassembly of warranty repair
- Any secondary damages of the stove or it's environments due to negligence of any initial damages whether this damage is covered or not by the manufacturers guarantee.

Warning



Inadequate installation, unauthorized alteration to the stove or the use of non-original parts will void the guarantee.

1.19 Cleaning after sweeping the chimney and replacing the stones

Note: it may be necessary to clean/vaccum the holes and air ducts behind the rear stone.

Order of removing Fire bricks.

1

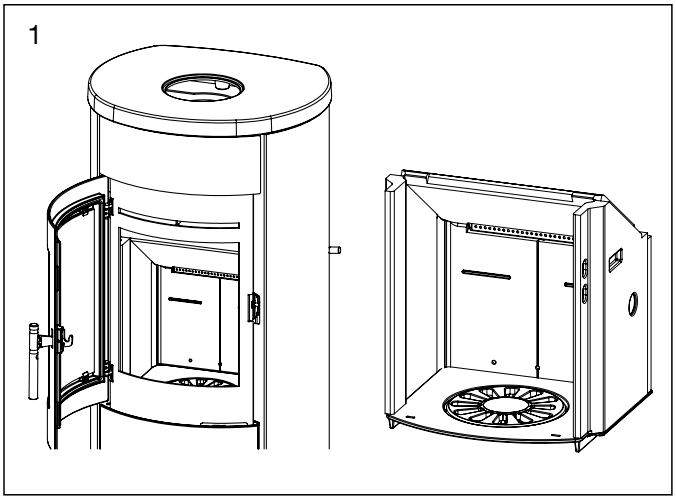

2

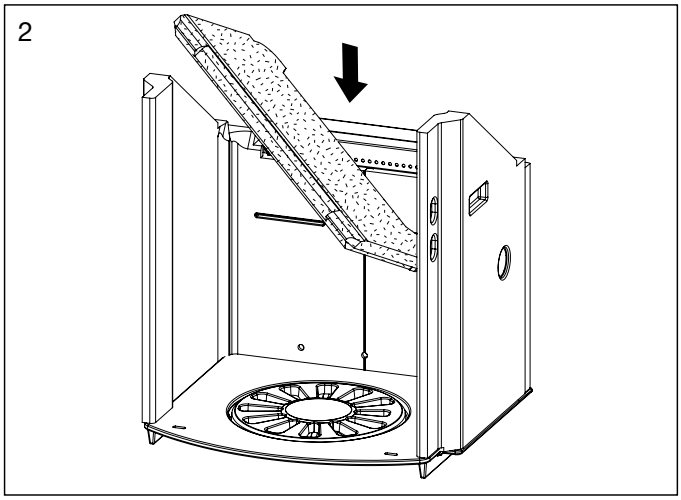

3

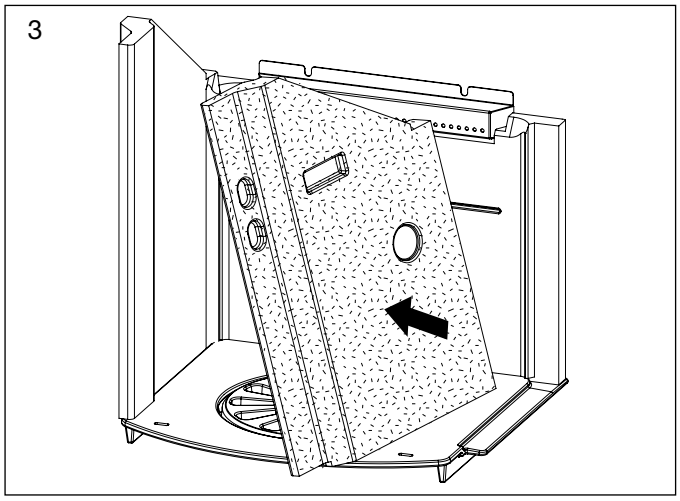

4

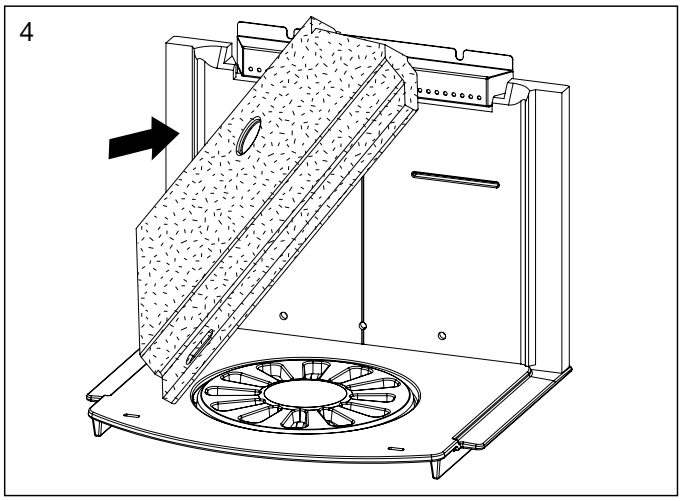

5

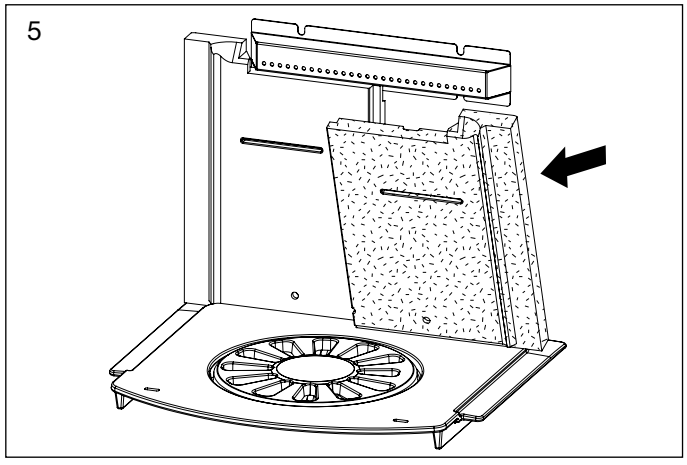

6

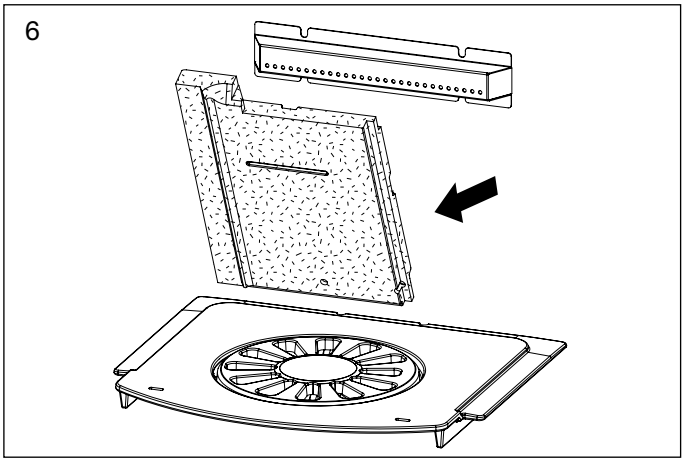

Replace in reverse order. Starting with Fig. 6.

1.20 Removal of plates between the cooling pipes and cleaning of cooling pipes

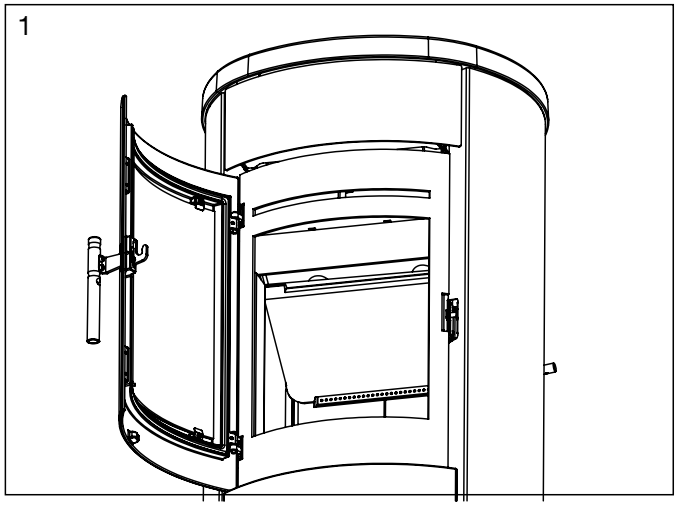

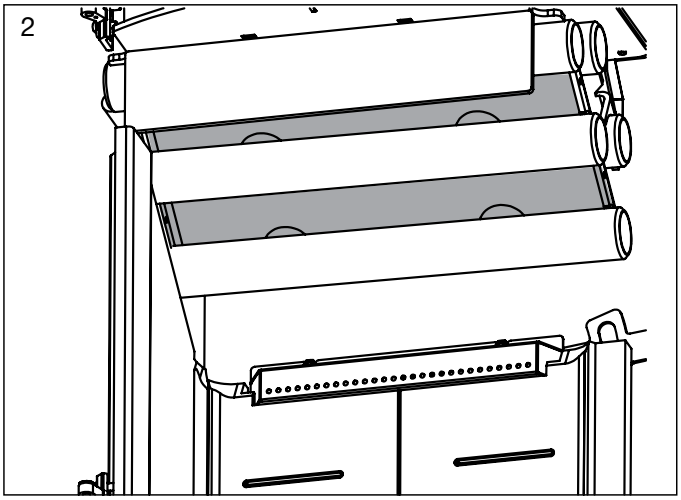

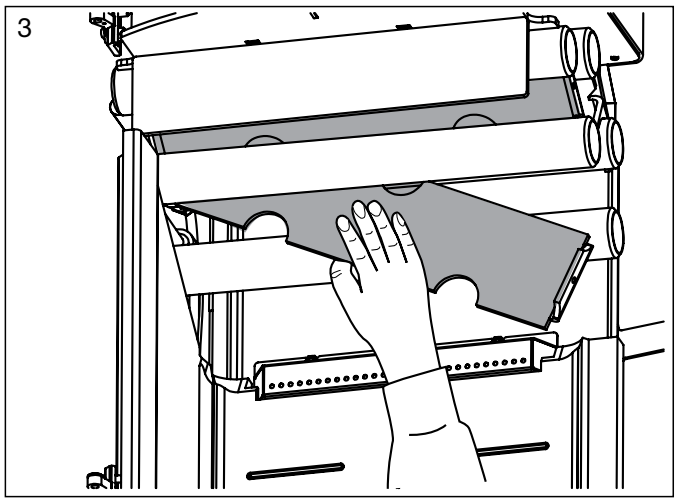

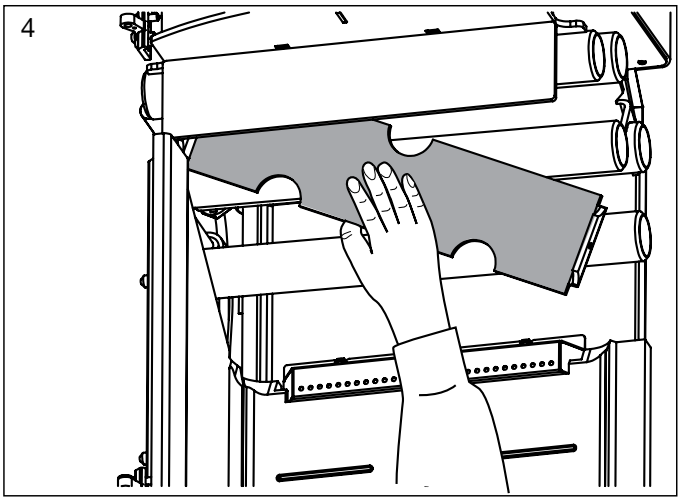

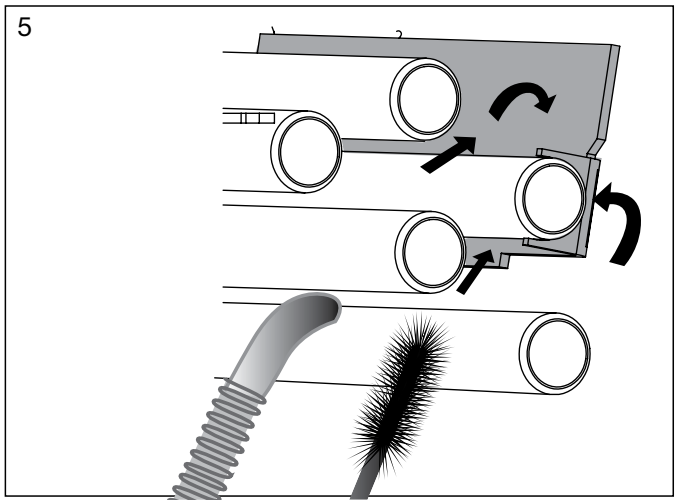

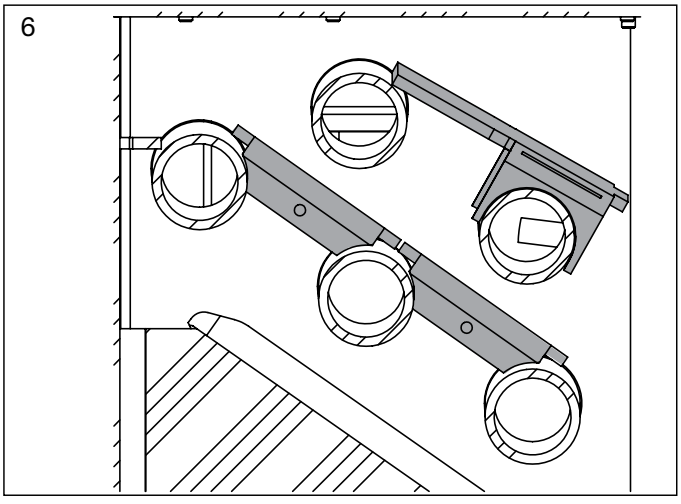

Tip the top plate so that possible soot can fall down into the cumbustion chamber, afterwards it is very important that the plate is put back in place, as it otherwise will result in great loss of efficiency and raise the temperature of the chimney.

It is very important that the plates between the cooling pipes lies as assembled on the picture (as when you receive it from Heta), otherwise it will result in great loss of efficiency and raise the temperature of the chimney.

1.21 Scan-Line 805 Aqua
Parts - Inside fire chamber

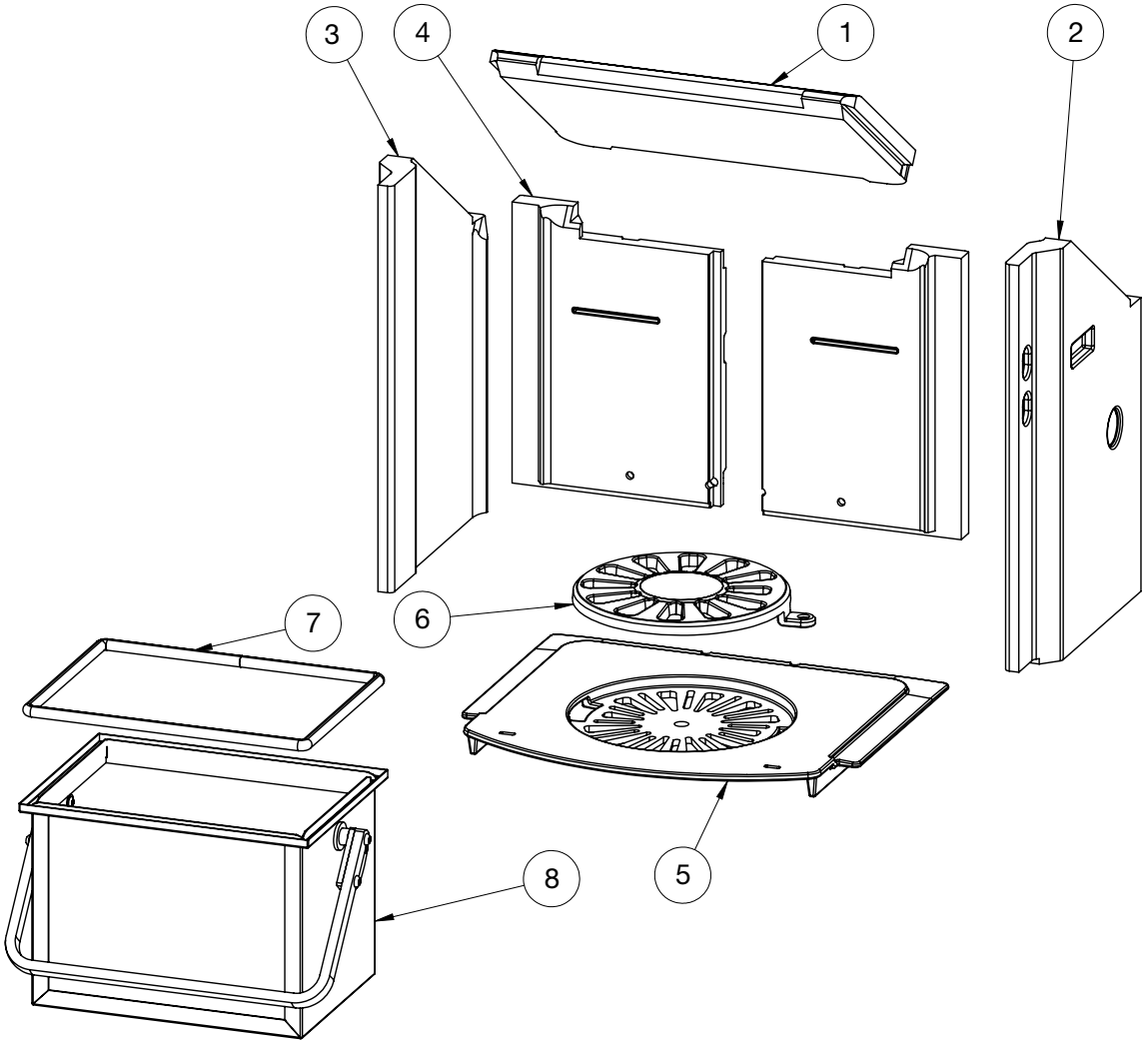

Pos.	No.	Name	Qty.
1	0023-0117	Baffle	1
2	0023-0118	Side stone right	1
3	0023-0119	Side stone left	1
4	0023-0236	Rear stone (two-part)	1
5	0030-0018	Casted bottom	1
6	0030-0201	Grate ø195 mm	1
7	0023-3017	Gasket L= 910 mm	1
8	4018-0030	Ash container	1

Parts - Inside fire chamber

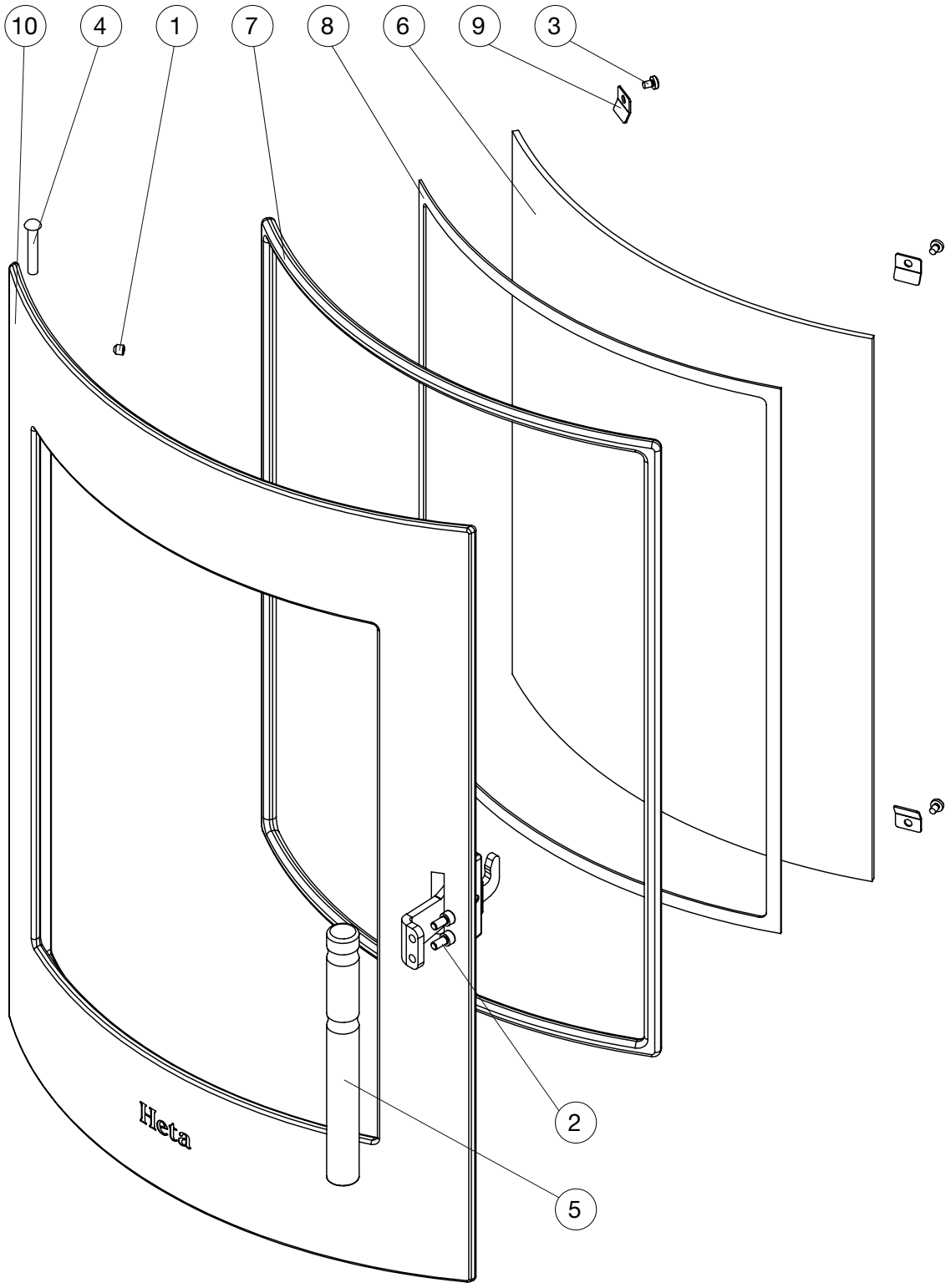

Pos.	No.	Name	Qty.
1	0008-1002	M6x6 Pinole screw	2
2	0008-2005	M5x10 screw	2
3	0008-2304	M4x6 screw	4
4	0008-9082	6x35 Round head rivet	2
5	0016-0084	Handle	1
6	0021-0055	Glass	1
7	0023-3008	Glass gasket ø12 L=1,8 m	1
8	0023-3013	Glass band 3x8 L=1,8 m	1
9	1013-0432	Glass clips	4
10	4005-0036	Stove door	1

Installation Instructions Contents

2. Installation instructions 17
2.1 Distance requirements 17
2.2 Floor 17
2.3 Chimney connection 17
2.4 Combustion air and ventilation 18
2.5 Mounting of still feet 18
2.6 Automatic ventilator 18
2.7 Installation of cooling kit before water connection 19
2.7 Connection water to Scan-Line 805 Aqua 20
2.8 Stovedrawings/measurments 21
2.9 Mounting of purchased Aqua performance kit 22
2.10 Changing to a back flue outlet 23
2.11 Clearances for installation EN 13 240 22

EU Declaration of Conformity 24

Remember

The stove and chimney installation, must comply with local regulations, including those referring to national and European standards.



2. Installation instructions

The stove installation must be in accordance with national, European and possibly local regulations. You must follow local regulations with regard to installation of chimney and connection to the chimney. We recommend that you let a professional Heta dealer install the stove. Alternatively, you can ask the local chimney sweep before installation. Be aware that it is always the owner himself who has responsibility for ensuring that applicable rules are complied with.

A modern stove places heavy demands on the chimney due to the high efficiency. It may be necessary to enhance or even replace an old chimney.

Remember

1. Always ensure free access to any cleaning doors in a chimney.
2. Always ensure ample fresh air to the room.
3. Exhaust/extraction fans in the house can reduce or create negative draft in the chimney. Reduced draft can lead to the stove having adverse combustion properties. It may result in smoke coming out of the stove when the door is open. A negative draft due to an exhaust/extraction fan can cause the chimney to work in reverse, drawing smoke into the house because of the fan.
4. Any air vents must not be covered.

2.1 Distance Provisions

There is a difference between installation next to flammable wall or non-flammable wall.

For non-combustible walls, a minimum of 5 cm is recommended between the oven and the wall for cleaning purposes behind the oven.

The minimum distance to combustibles can be found on the model plate provided with the stove or on page 11 of this manual.

2.2 Floor

You must ensure that the floor can support the weight of the stove and a top-mounted steel chimney.

In front of the fireplace insert, the substrate must consist of non-combustible material, for ex. Steel/glass plate, stone or tile floor. The size of the non-combustible surface must follow the applicable national and local regulations. Protecting your floor from embers that may fall out of the oven.

Safety distances see page 23.

Pay special attention to the distance from flammable floor, which is also valid even if there are a steel, glass, stone or tile over flammable materials.

2.3 The chimney connection

The chimney opening must follow national and local regulations. However, the area of the opening should never be less than 175 cm^2, which corresponds to a diameter of 150 mm. If a damper is fitted in the flue gas pipe, there must always be at least 20 cm^2 of free passage, even when the damper is in its “closed” position.

If local regulations permit, two contained stoves can be connected to the same chimney. However, you must abide by local regulations regarding the distance between the two connections.

The stove must never be connected to a chimney that is linked to a gas fire stove.

An efficient stove makes high demand on chimney properties – so always have your local chimney sweep evaluate your chimney.

Connection to a brick chimney

Brick a thimble into the chimney and seat the flue gas pipe in this.

The thimble and flue gas pipe must not penetrate the chimney opening itself, but must be flush with the inside of the chimney duct. Joins between brickwork, the thimble and flue gas pipe must be sealed with fireproof material and / or beading. Heta A/S stresses that it is of utmost importance that this is done correctly with very tight joints. As mentioned earlier, we recommend that setup and installation be left to a professional Heta dealer.

Connection to a steel chimney

The steel chimney must meet T400 at least.

When installing the chimney through the ceiling, national and local regulations must be followed regarding distances to flammable materials.

It is important that the chimney is mounted with a roof support so that the stove’s top plate does not support the chimney (the stove is approved to be able to carry 120 kg.)

2.4
Combustion air and Ventilation

The stove is approved as a room air dependent stove in accordance with EN 13240. All the combustion air in the inset stove comes from the room in which it is fitted. However, by connecting a sealed air inlet to the stove's air intake connector, the stove can be supplied with external combustion air. In this respect, the following requirements must be met:

- Only approved materials may be used from the ventilation unit to the air inlet vent.
- The air inlet vent must be fitted correctly and insulated to prevent formation of condensate. The cross section of the vent and grille must be at least 78 cm^2.
- If the vent leads out into the open air, please note that the grille must be fitted with suitable wind protection. There must be no risk that the grille can get clogged by leaves, etc.
- The stove has been tested with 3 m of 100 mm pipe, with 3 90 degree bends.

2.5 Mounting of still feet

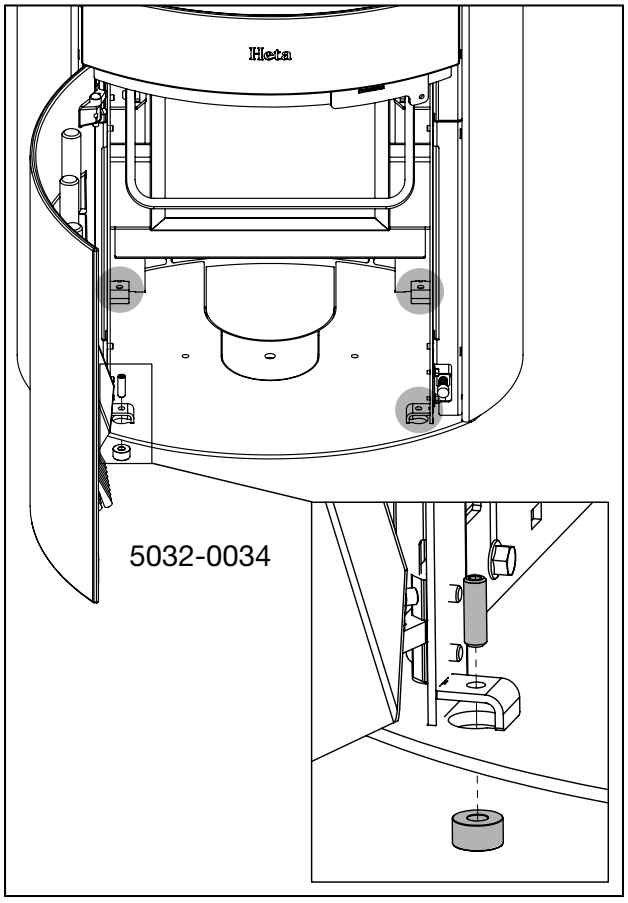

2.6 Automatic vent

Carry out a thorough flushing of the system by separating the automatic air vent to remove impurities in the system.

Venting the automatic vent

(Only the first time and after the system has been refilled).

To remove the air in the system after installation of the stove, unscrew the top of the automatic vent, so the air can escape. Fig. 1 and 2.

Close the water supply when water can be seen at the bottom of the air vent, then screw the top back on and the automatic air vent will remove the last air in the system.

Maintenance and service

Inspect the automatic air vent regularly (at least once a year), this is always done with a cold stove and without pressure on the system.

1

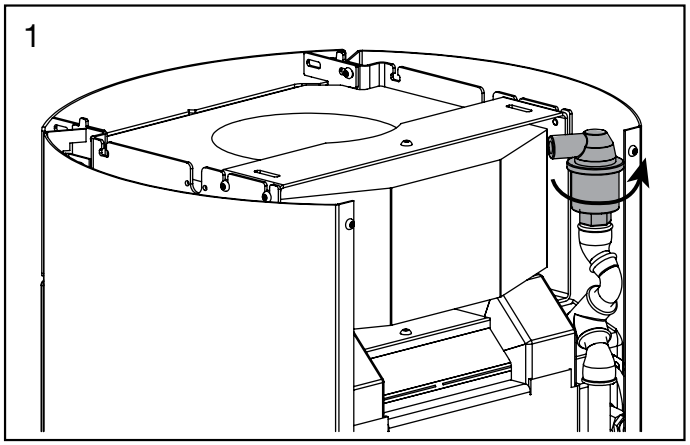

2

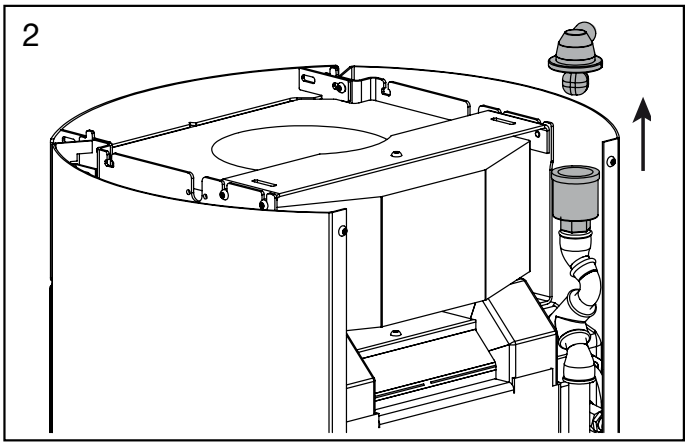

2.7 Installation of cooling kit before water connection

1

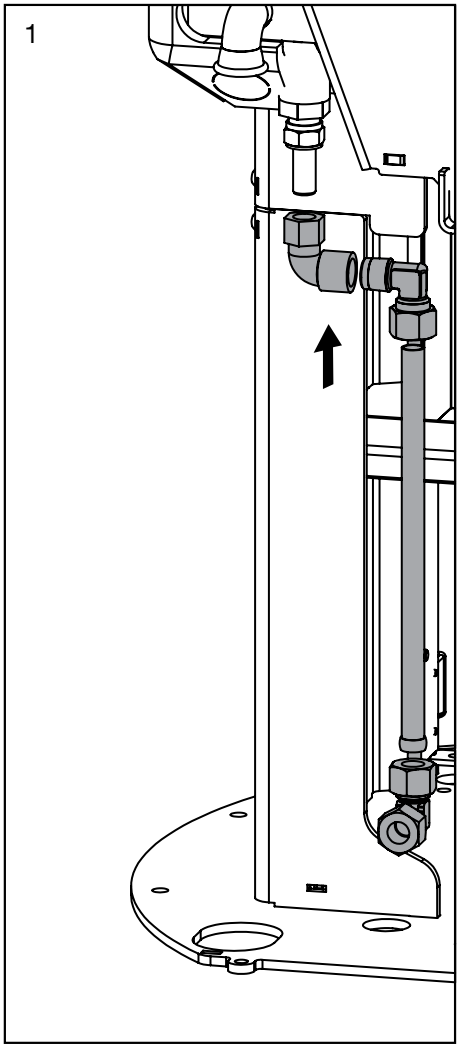

2

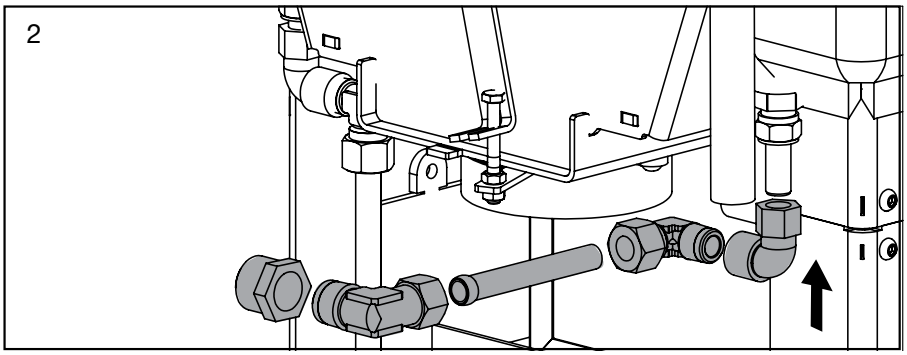

3

Important!!
The flow direction arrow must point as shown in the picture.

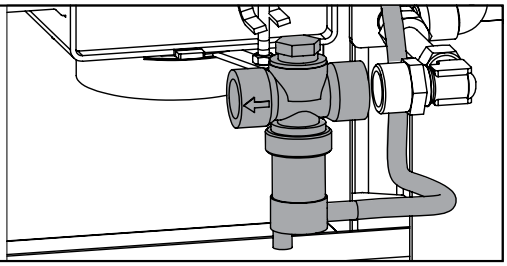

4

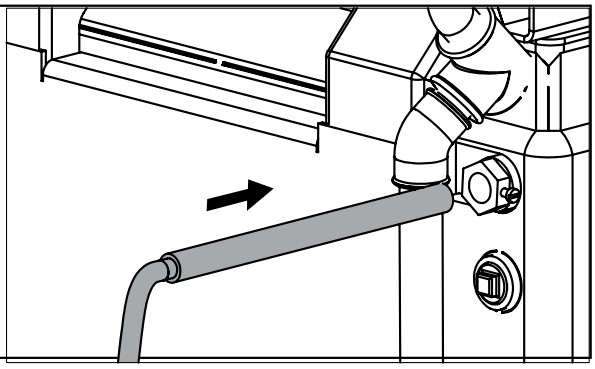

Cooling kit 5032-031924 must always be installed before commissioning the oven in a closed system.

The diameter of the discharge pipe must min. be the same as that of the outlet of the valve (3/4”).

The maximum length must not be greater than 2 m. and no more than two 90-degree elbow are permitted.

For further information, see the accompanying Caleffi 543 series documentation.

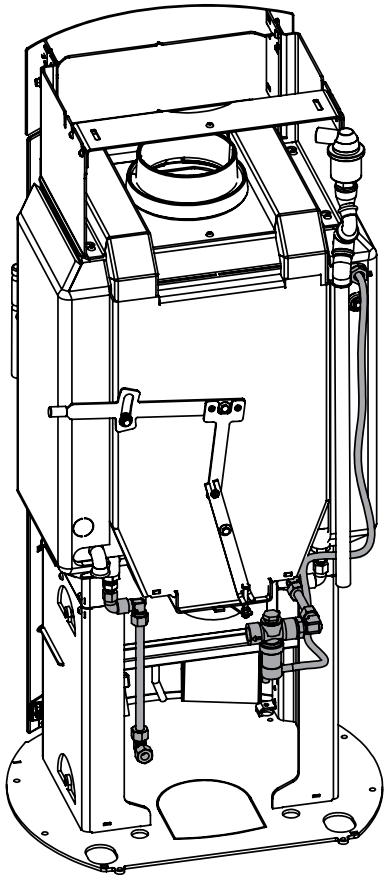

2.8 Connection water to Scan-Line 805 Aqua

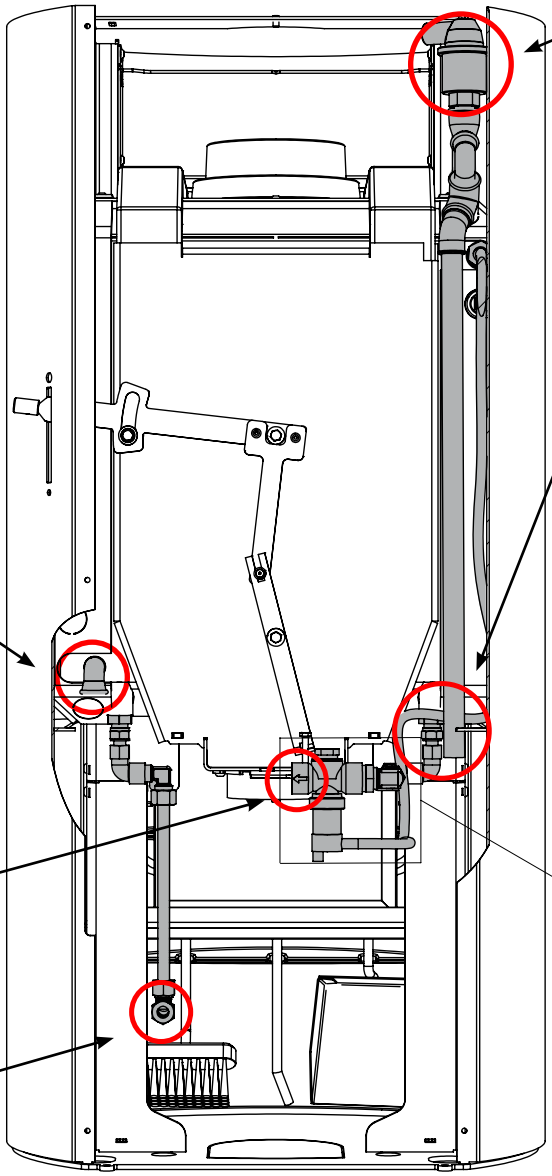

Install the valve on horizontal pipes only, with the obturator axis vertical. Side installation (horizontal axis) is permitted. **Never install the valve upside down.**

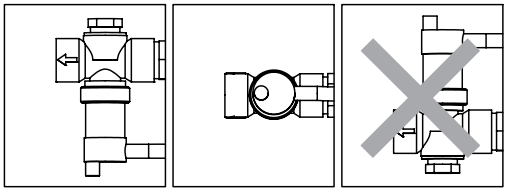

SYR-Temperature valve (pkt. 5)

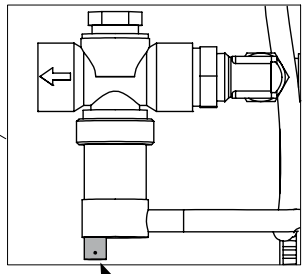

Periodic inspection
The safety valve should be tested twice a year by pressing the red button. If this does not work, the oven must not be used.

Scan-Line 805 Aqua is delivered from Heta so that it can be fitted on an existing system with matching circulating pump and safety valve.
By connection you should make sure that the stove is supplied minimum 140 litres of water per hour and that the existing system has a safety valve which opens by maximum 4 bar overpressure. The SYR valve (point 5) is an extra safety device which opens by a temperature over 95° in the boiler.
Connect cold water pressure on maximum 15° on the ½” water connection (point 1) (make sure that your water company supplies approx. 600 litres per hour. This could be checked by seeing if you can fill a 10 litres bucket on 1 minute.).

Testing the SYR temperature valve
Once the installation is complete, turn on the water pressure. Check that the thermostatic valve is completely tight, this is done by checking whether water has come out of the drain (point 2).

Water drain
Connect min. 3/4” pipe for (point 2) water for outlet to the existing outlet so that you visually can see if the extra safety device has been activated.

NB!! The installation should always be carried out in accordance with valid standards and regulations by an authorized electrician.

2.9 Stovedrawings/measurments

Scan-Line 805 Aqua Standard

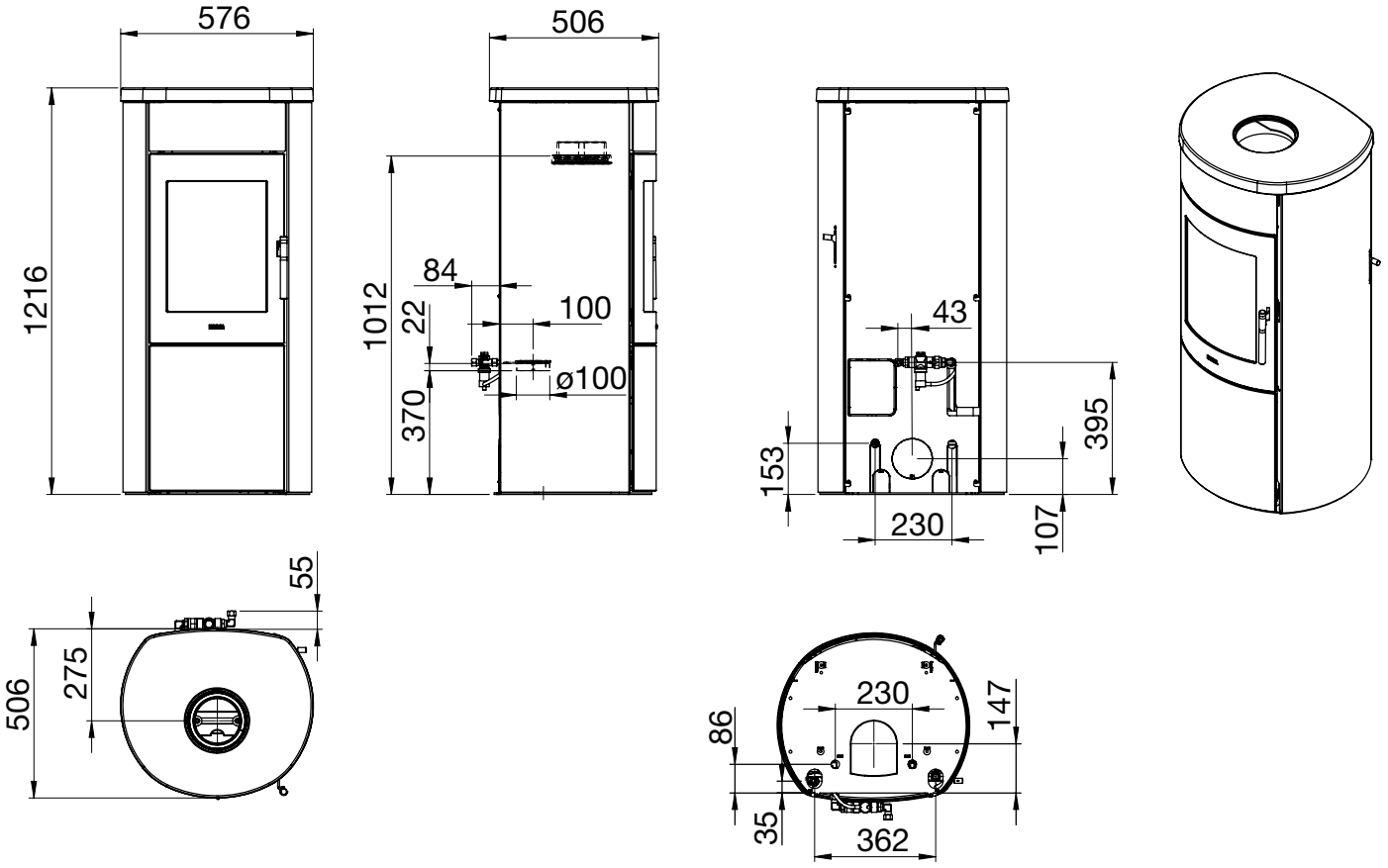

Scan-Line 805 Aqua Stone

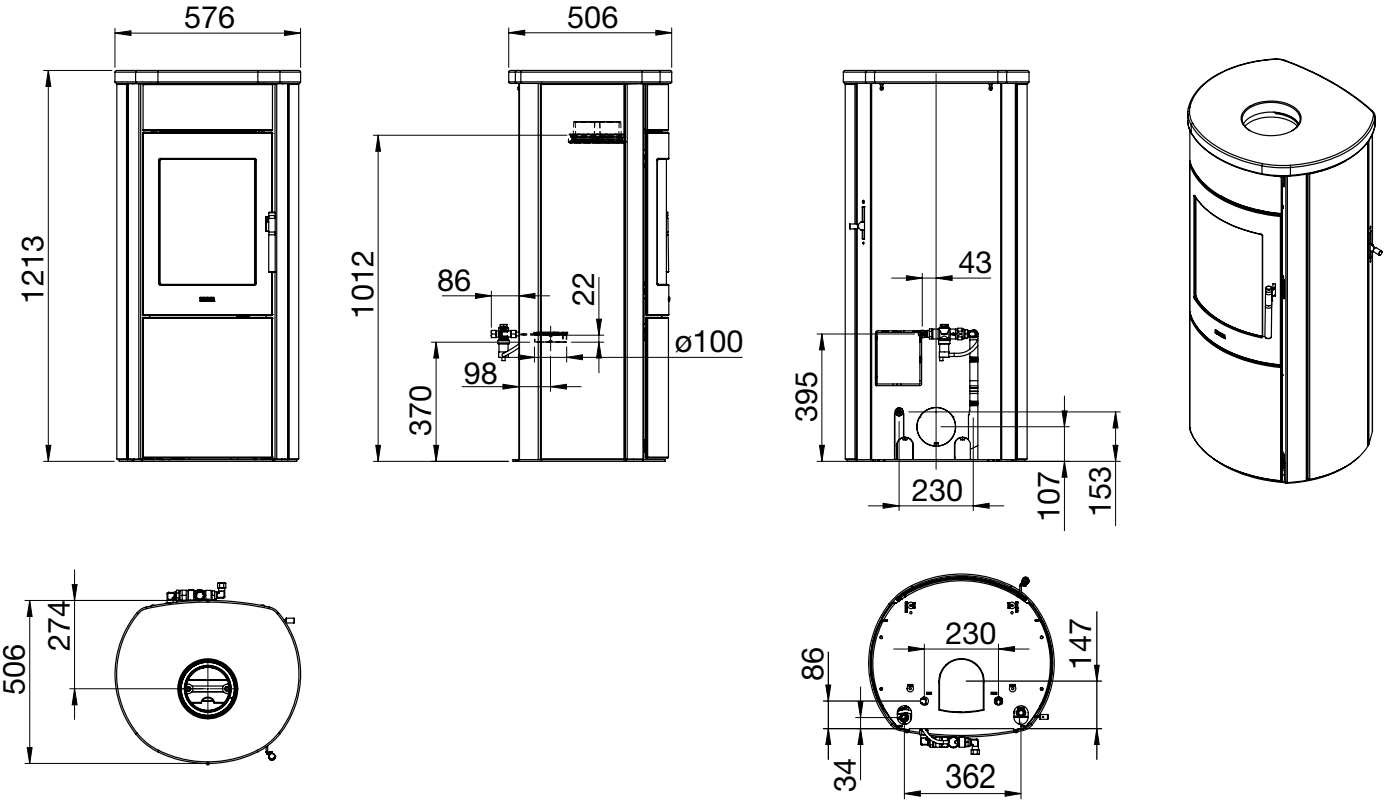

2.10 Mounting of purchased Aqua performance kit

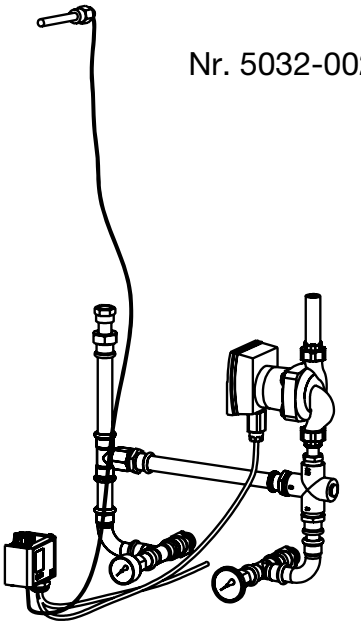

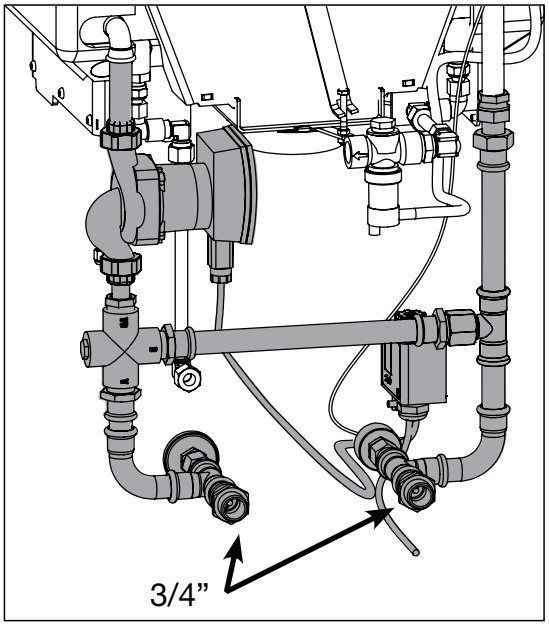

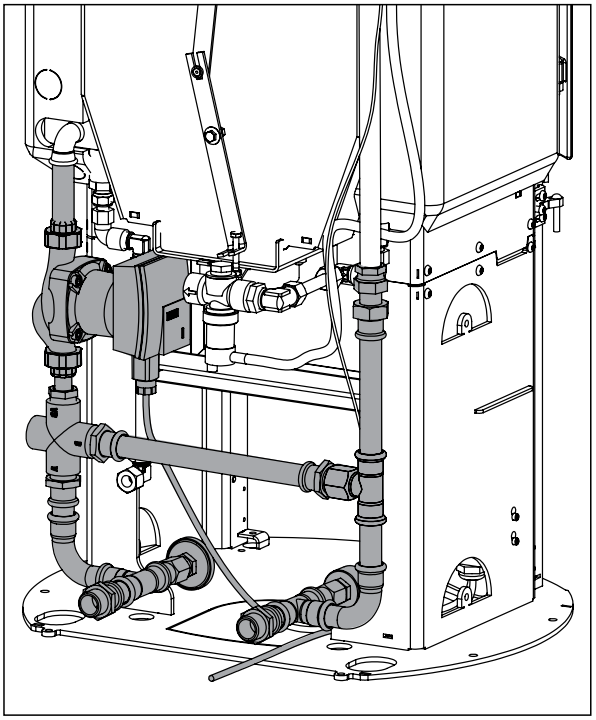

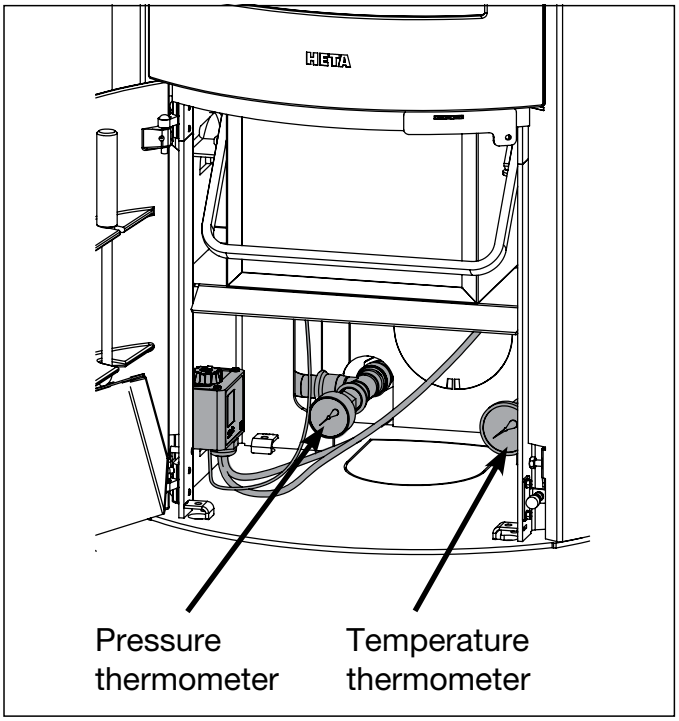

2.11 Connecting direct air below or behind

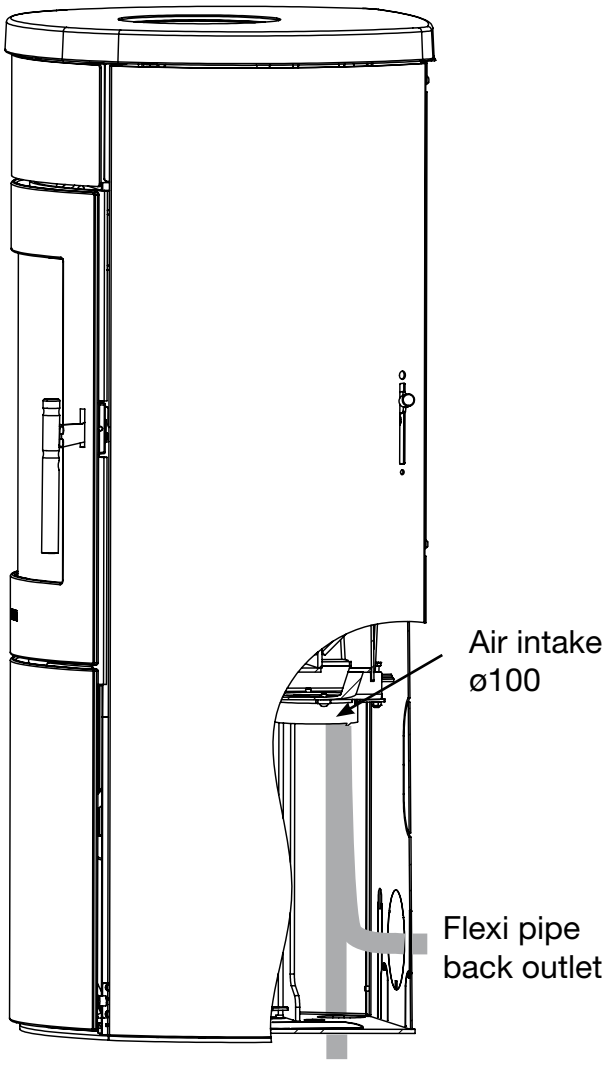

Flexi-pipe to the floor

Direct air supply

The dimensions of the direct air supply pipe, may not be less than ø100 mm, the draught in the flue depends on this air for optimal combustion.

Heta recommends max. 4 meters of direct air pipe, with max. 3, 90° bends and a min. of ø100 mm.

When installing external air supply, connect the air intake to the direct air pipe using flexi-pipe, both from the floor or behind the stove.

Flexi-pipe not included.

2.12 Clearances for installation EN 13240

Brennbarem
Material

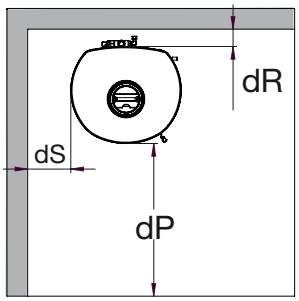

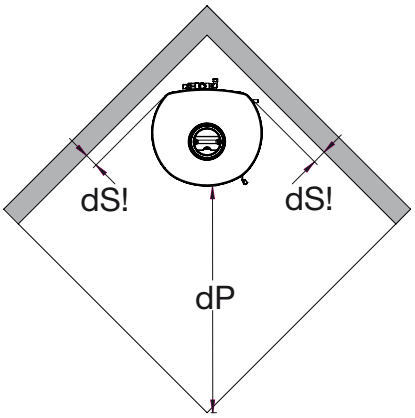

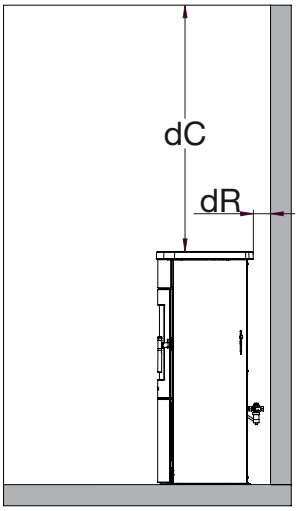

Clearances for installation

Stove Minimum dimensions	Distance to flamable materials				
	dR rear the stove	**dS** at the sides	**dP** at furnitures	**dS!** Corner distance	**dC** Over stove ceiling
Scan-Line 805 Aqua serien	22	175	750	22	750

HETA

Ecodesign
EU Declaration of Conformity

DoC Scan-Line 800 Aqua 1757-2013

Product fiche

CE

Manufacturer	Heta A/S
Adress	Jupitervej 22, DK 7620 Lemvig
E-mail	heta@heta.dk
Website	www.heta.dk
Telephone	+45 9663 0600

Model identifier	Scan-Line 800, 805 Aqua serie

The identified product described above is in conformity with:
The relevant EU harmonized regulations:
DIR 2009/125/EF
REG (EU) 2015/1185
REG (EU) 2015/1186
REG (EU) 2017/1369
REG (EU) 305/2011
The relevant harmonized standards
EN 13240:2001/A2:2004
CEN/TS 15883:2010

Characteristics when operating with the preferred fuel only		
Heat output		
Item	**Symbol**	**Value/Unit**
Nominal heat output	P_{nom}	8,7 kW
Minimum heat output	P_{min}	
Useful efficiency (NCV as received)		
Useful efficiency at nominal heat output	$\eta_{th,\ nom}$	87%
Useful efficiency at minimum heat output	$\eta_{th,\ min}$	
Auxiliary electricity consumption		
At nominal heat output	el_{max}	- kW
At minimum heat output	el_{min}	- kW
In standby mode	el_{SB}	- kW

Type of heat output/room temperature control	
single stage heat output, no room temperature control	Yes
two or more manual stages, no room temperature control	No
with electronic room temperature contro	No
with electronic room temperature control	No
with electronic room temperature control plus day timer	No
with electronic room temperature control plus week timer	No

Other control options	
room temperature control, with presence detection	No
room temperature control, with open window detection	No
with distance control option	No

Notified body relevant to the assessment and verification of constancy of performance
Danish Technological Institute, DK-8000 Aarhus No. 1235. Report no. 300-ELAB-1757-EN

Fuel	**Preferred fuel**	**Other suitable fuel**
Wood logs with moisture content ≤ 25 %	Yes	No
Compressed wood with moisture content < 12 %	No	Yes
Other woody biomass	No	No
Non-woody biomass	No	No
Anthracite and dry steam coal	No	No
Hard coke	No	No
Low temperature coke	No	No
Bituminous coal	No	No
Lignite briquettes	No	No
Peat briquettes	No	No
Blended fossil fuel briquettes	No	No
Blended biomass and fossil fuel briquettes	No	No
Other blend of biomass and solid fuel	No	No

Emissions at nominal heat output	η_s %	mg/Nm³ (13 % O_2)			
		PM	**OGC**	**CO**	**NO_x**
	≥ 65	≤ 40	≤ 120	≤ 1500	≤ 200
	77	22	56	666	115

Technical documentation	
Indirect heating functionality:	3,1 kW
Direct heat output:	8,7 kW
Energy Efficiency Index (EEI):	EEI 116
Fluegas temperature at nominal heat output	**T 182°C**
Energy efficiency class	A+

Safty	
Reaction to fire	A1
Test of fire safety in connection with the burning of wood	Approved
Maximum water operating pressure	4 bar
Distance to combustible materials Rear. Without insulation / with insulation Sides distance to combustible materials Furniture distance	Minimum distances in mm 22 175 750

Signed on behalf the manufacturer of **20.11.2025**

HETA
Jupitervej 22, DK-7620 Lemvig
TLF: +45 96 63 06 00
Martin Bach

The chimney sweep's signature Date_____

_____
Signature