INSTALLATION INSTRUCTIONS

AQUA PRFORMANCE KIT
SCAN-LINE 805 AQUA SERIEN

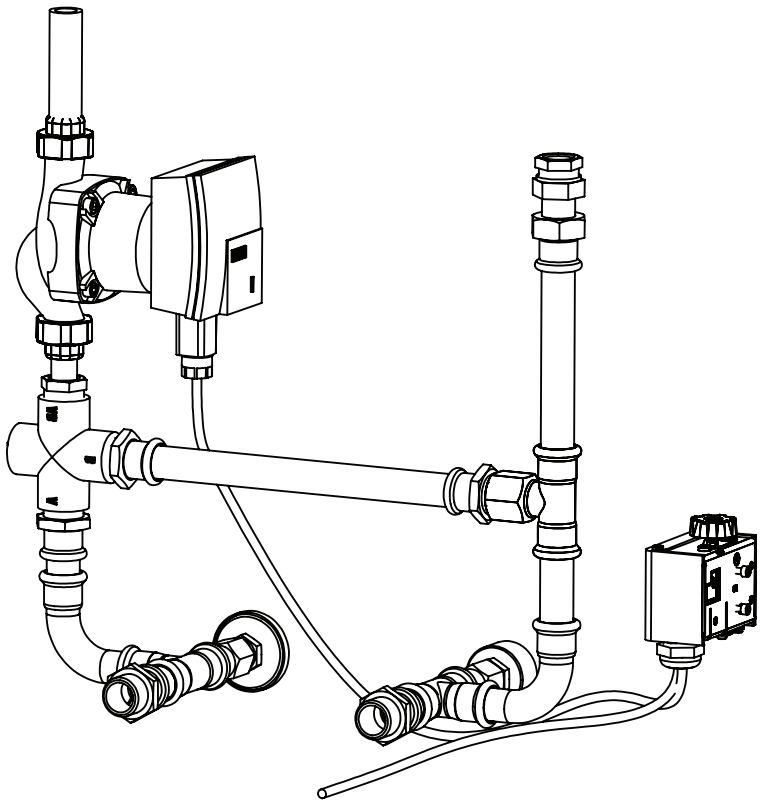

www.hetaheating.com

HETA

EN

DANISH DESIGN . DANISH QUALITY . DANISH PRODUCTION

Dear customer
Please read these installation instructions prior to installation and operation to avoid personal injury or damage to building elements or the product.

These instructions explain how to install the Heta Aqua Performance Kit (APK) on the Scan-Line 805 Aqua wood-burning stove series.



Installation may only be carried out by an authorised plumber / electrician.

Table of contents

1.1 Installing the cooling kit (thermostatic valve) 3
1.2 APK overview 4
1.3 Installing the APK Kit Step 1 and 2 4
1.4 Installing the APK Kit Step 3 5
1.5 Installing the APK Kit Step 4 6
1.6 Installing the APK Kit Step 5 7
1.7 Installing the APK Kit Step 6 8
1.8 Installing the APK Kit Step 7 9
1.9 Installing the APK Kit Step 8 10
1.10 Installing the APK Kit Step 9 11
1.11 Installation recommendation - Central heating system 12
1.12 Installation recommendation
- Central heating system with a solar collector 13
1.13 Installation recommendation
- Central heating system (return) 14
1.14 Statutory safety requirements 15
1.15 Warranty claim conditions 15
1.16 Nameplate 15
1.17 Service & Warranty 15
1.18 Troubleshooting 15
1.19 Spare parts 16

Heta A/S
Jupitervej 22,
DK-7620 Lemvig
Phone: +45 9663 0600
E-mail: heta@heta.dk

Copyright © 2014
Heta is a registered
trademark of Heta A/S

Printed in Denmark
Subject to printing errors
and changes.

22.10.2026
0037-1402 Version 2,1

1.1 Installing the cooling kit

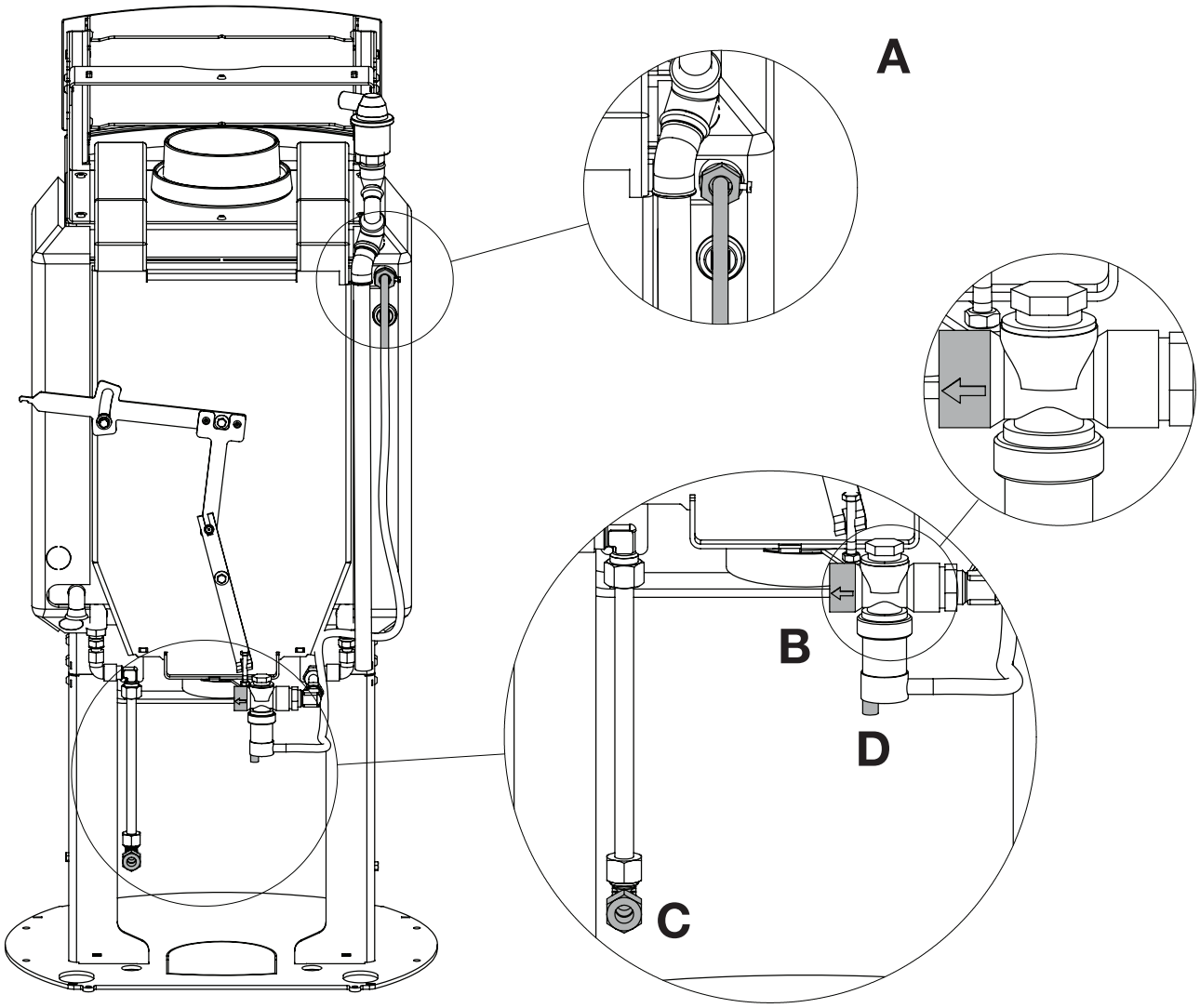

The cooling kit is always included with the Scan Line 805 series Aqua wood-burning stoves.
The kit is intended for closed units and systems where it is imperative that the boiler is not dam aged in any way.
The cooling kit must always be installed **before** beginning installation of the Aqua Performance Kit (APK).
See operating and installation instructions for installing the cooling kit for Scan-Line 805 Aqua.

Water supply
Ensure that the system's water supply (shown at C on the diagram) has a maximum water temper ature of 12°C and a constant initial pressure of at least 2.5 bar.

A correct water pressure of 2.5 bar corresponds to filling a 10-litre bucket in 1 minute.

Outlet
The outlet shown at point B on the diagram must be run to an unobstructed drain and the end of the pipe should be cut at 45°.

Testing
Once installation is complete, turn on the water supply. Check that the thermostatic valve is properly sealed by inspecting for any water leak from the drain (at B be on the diagram)

Periodic inspection
The safety valve shown at D on the diagram should be tested twice a year. If it does not function properly, the wood-burning stove must not be used.

Only install the valve on horizontal pipes with the axis of the closing mechanism vertical. Installation on the side (horizontal axis) is permitted. **Never install the valve upside down.**

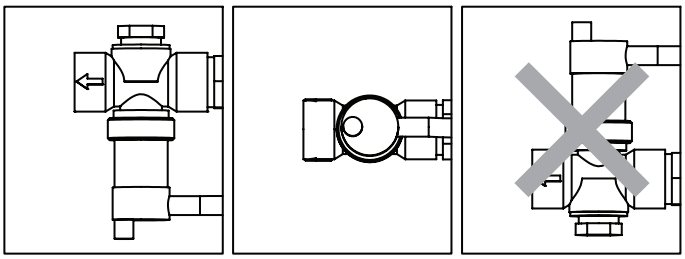

1.2 APK Overview

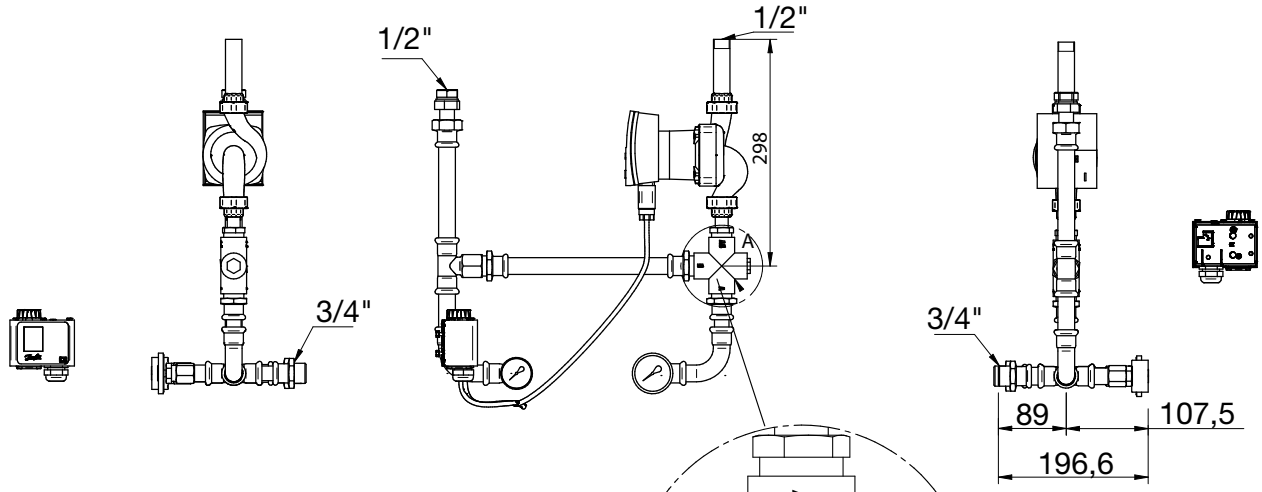

The Aqua Performance Kit (APK) consists of a number of components as illustrated in the above overview drawing.

It is important that the assembly is carried out in the described order and that attention is paid to the described details.

Pack all threaded ends - with no exceptions!

The three-way valve must be installed correctly and completely in line with these instructions.

If the valve is not correctly oriented, the circuit will not function and material damage might occur which is not covered by the warranty.

Please therefore note carefully how the ends labelled A, B and AB are connected!

1.3 APK kit installation

Step 1 og 2

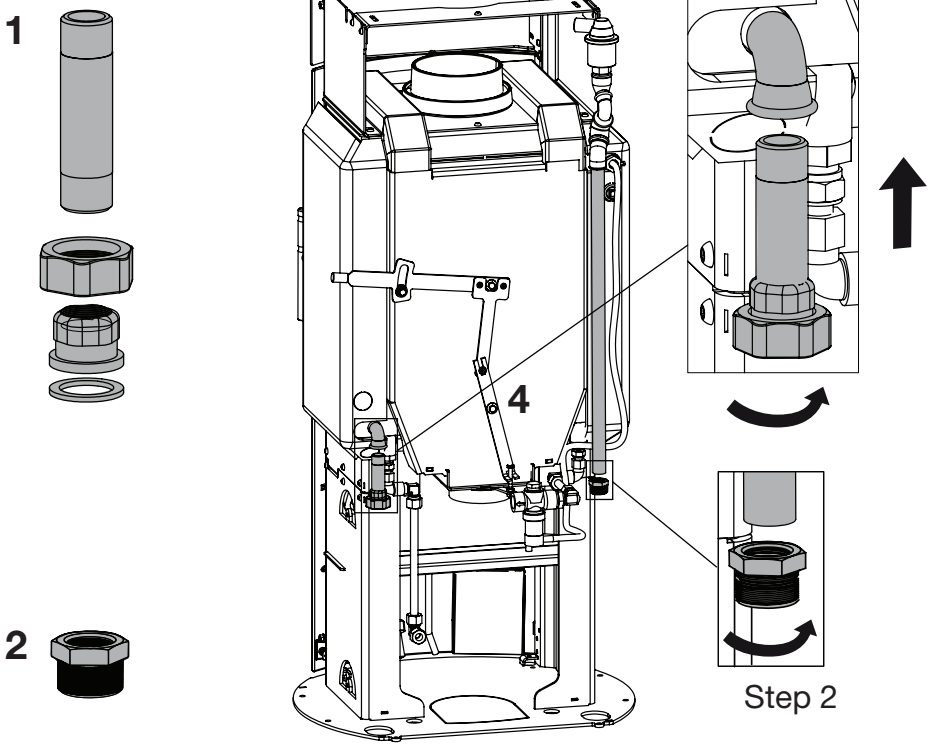

1.
Fit the brass nipple (1/2” x 80 mm) and pump union on the pipe together.

1.4 APK kit installation

Step 3

A torque wrench must be used when fitting the three-way valve, and torque must not exceed 30 N

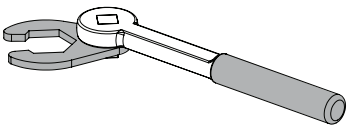

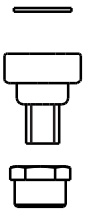

①

1.
Connect the pump union to the 3/4” x 1/2” brass nipple sleeve.

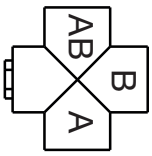

②

2.
Thermostatic valve with (AB) facing upwards

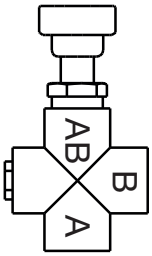

③

3.
Attach to the (AB) end of the thermostatic valve.

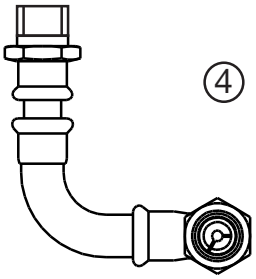

④

4.
Assembly piece 1.

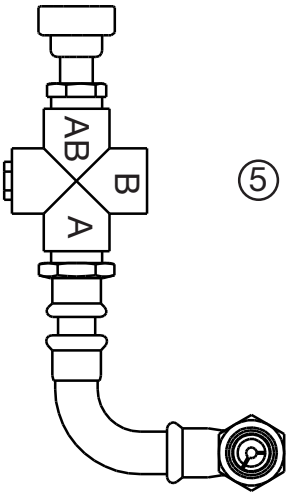

⑤

5.
Attach to the (A) end of the thermostatic valve.

1.5 APK kit installation

Step 4

A torque wrench must be used when fitting the three-way valve, and torque must not exceed 30 N

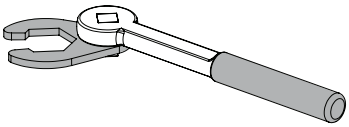

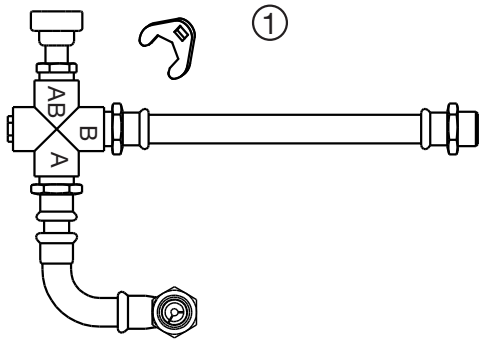

1.
nstall 1/2” union (nipple) on assembly piece 2.

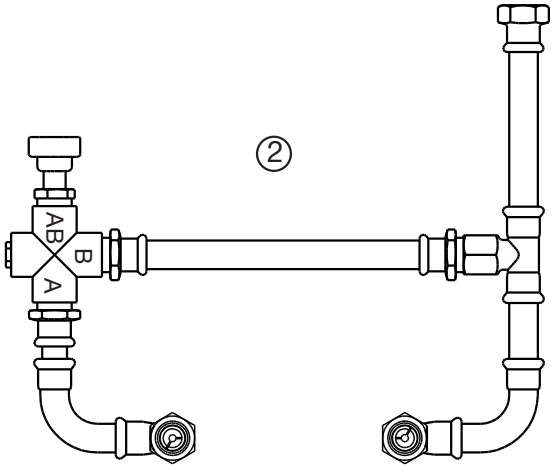

2.
Connect assembly piece 3 to the thermostatic valve (B) end and assembly piece 2.

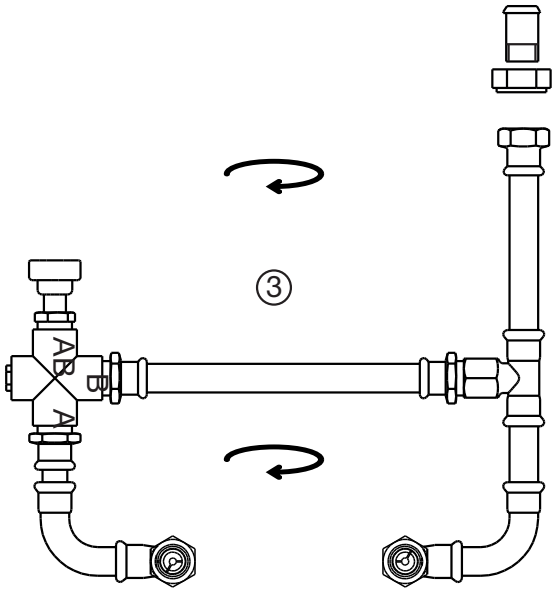

3.
Pack the thread on the straight 1/2” radiator union (pos. 3) and tighten in place using a 12mm hex key.
Then rotate the fixture 180 degrees.

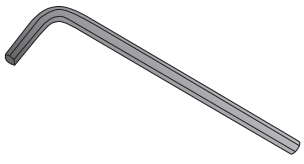

1.6 APK kit installation

Step 5

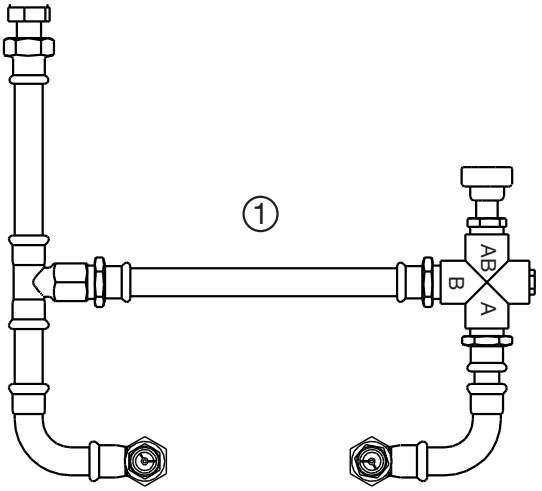

1.
Assembly piece 2 is on the left side.
Assembly piece 1 and the thermostatic valve are on the right side.

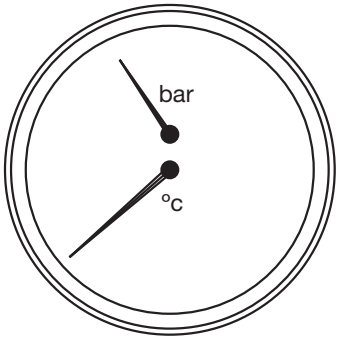

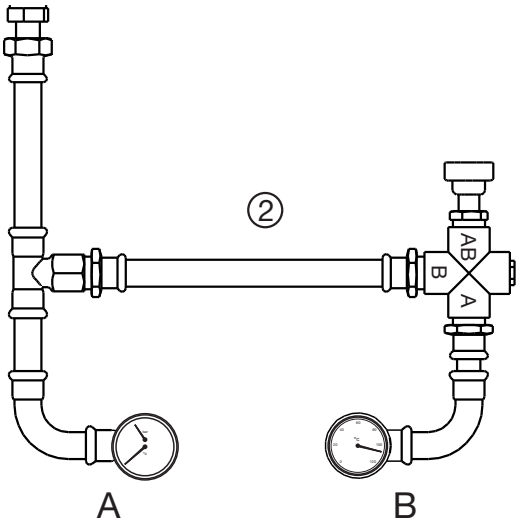

2.
Attach the thermo-manometer (A) to assembly piece 2. Attach the thermometer (B) to assembly piece 1.

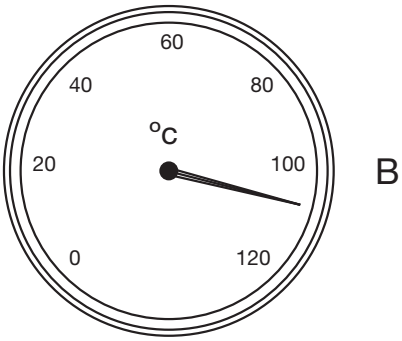

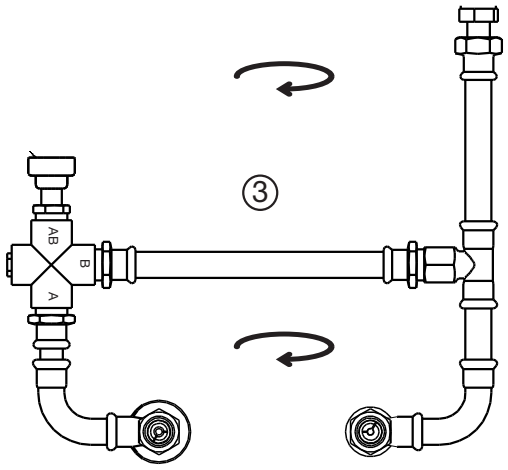

3.
Rotate the fixture 180 degrees.

1.7 APK kit installation

Step 6

1

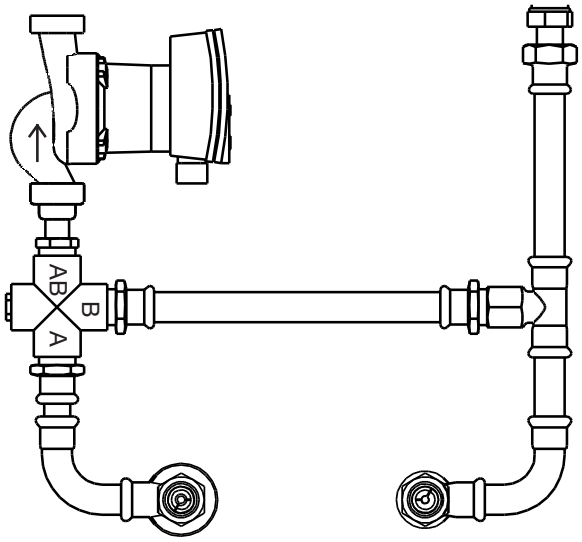

1.
Attach the WILO pump to the fixture as shown.

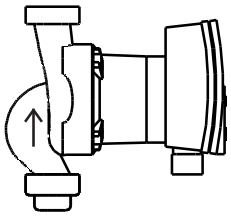

2

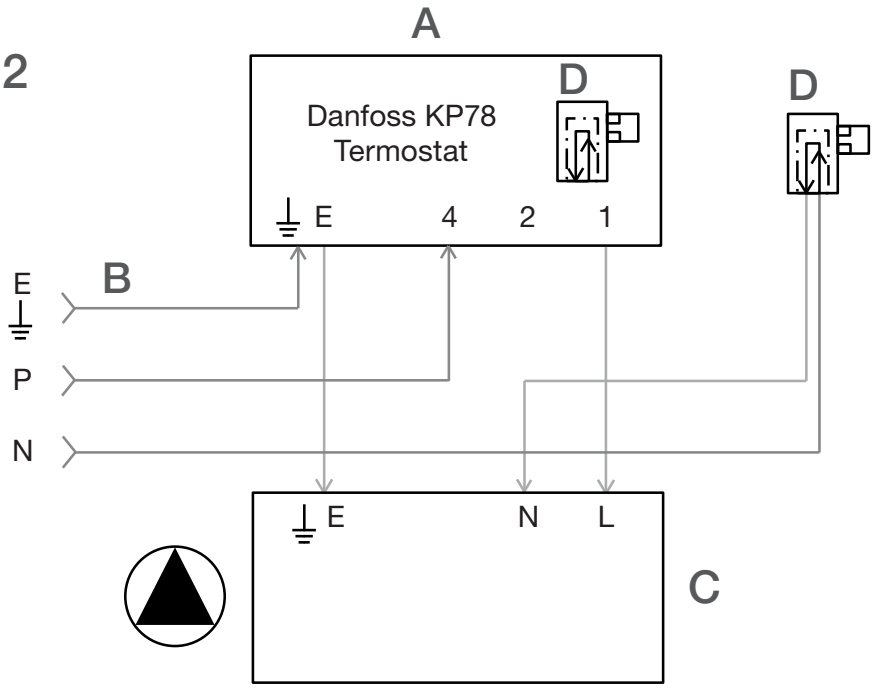

2.
Attach wires to the pump socket and Danfoss thermostat as shown in the diagram.

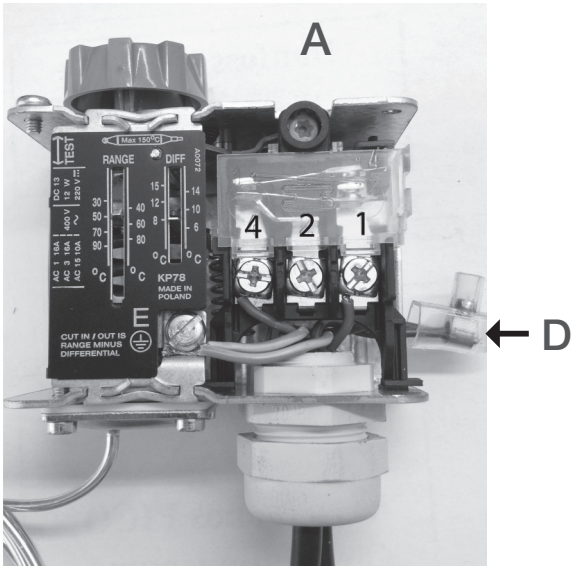

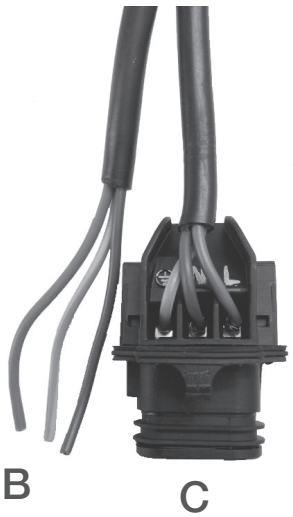

1.8 APK kit installation

Step 7

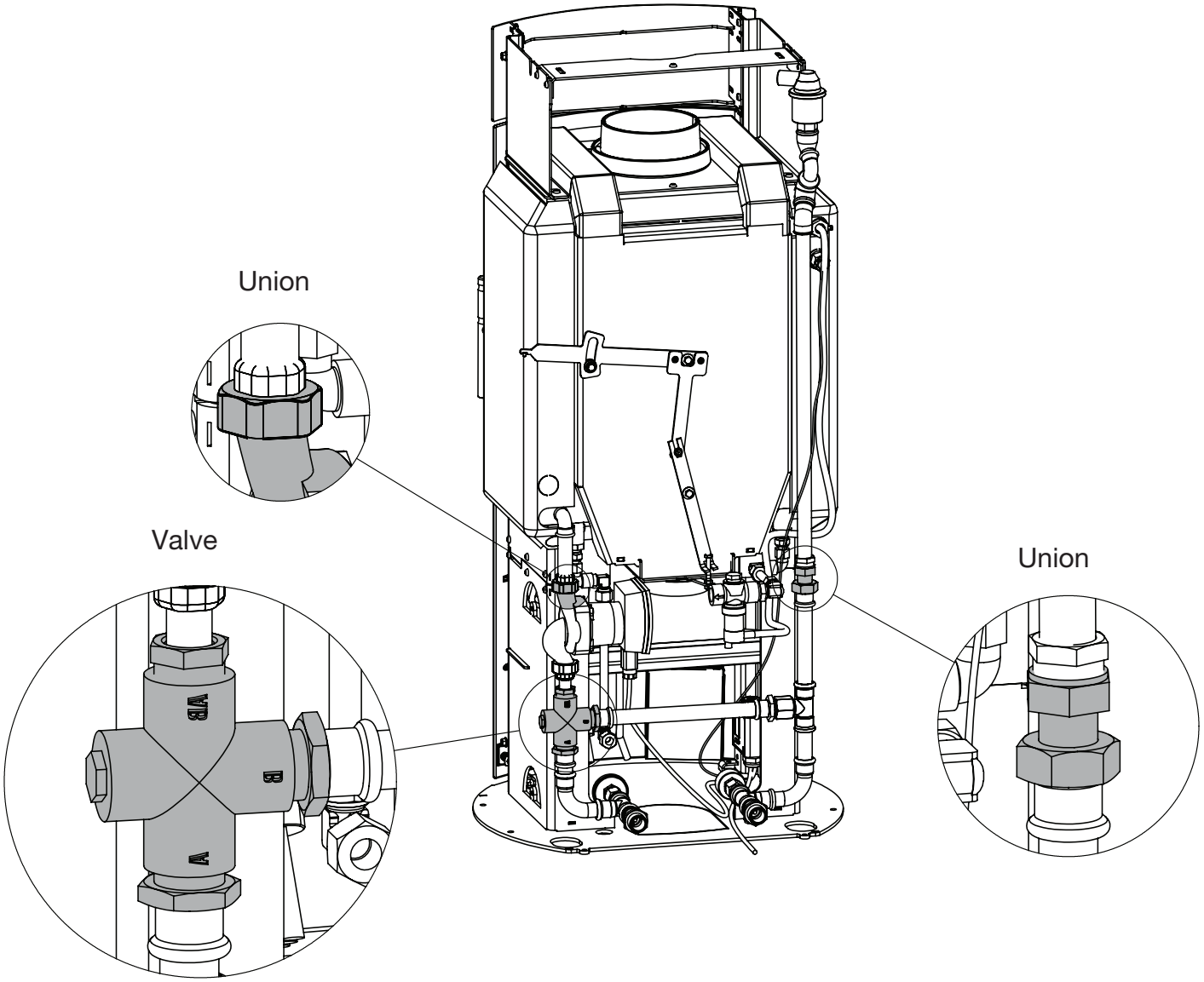

1.
Attach the fixture to the stove such that the three way valve and pump are positioned on the left.

2.
Finger-tighten both unions to pre-install the fixture on the stove.

3.
Use appropriate tools to tighten both unions.

1.9 APK kit installation

Step 8

2 x 0008-0038

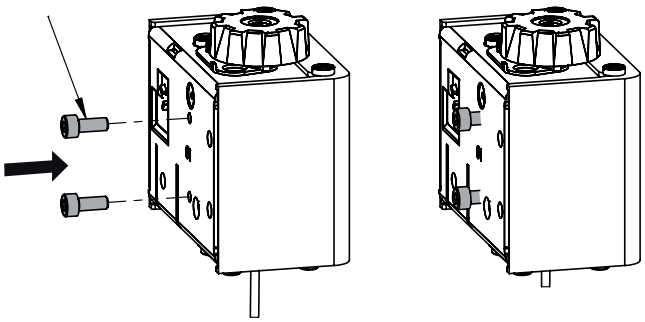

1.
Fit two 4 x 10 mm screws to the Danfoss KP78 thermostat using a at-head screwdriver.

2.
Attach the Danfoss KP78 thermostat inside the base of the stove.

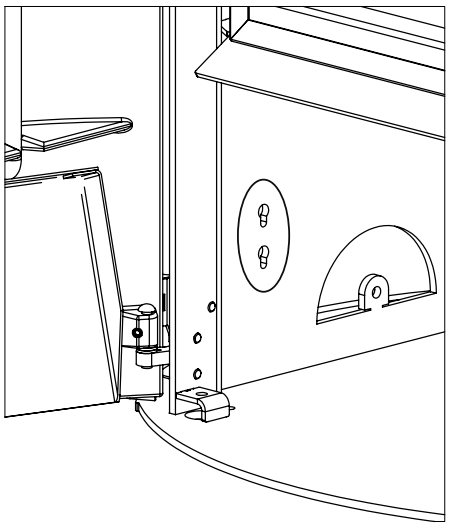

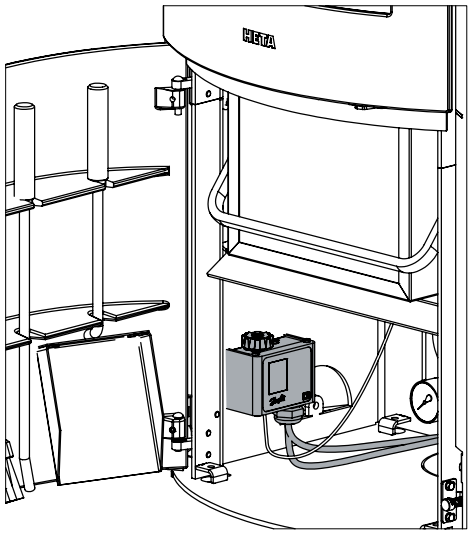

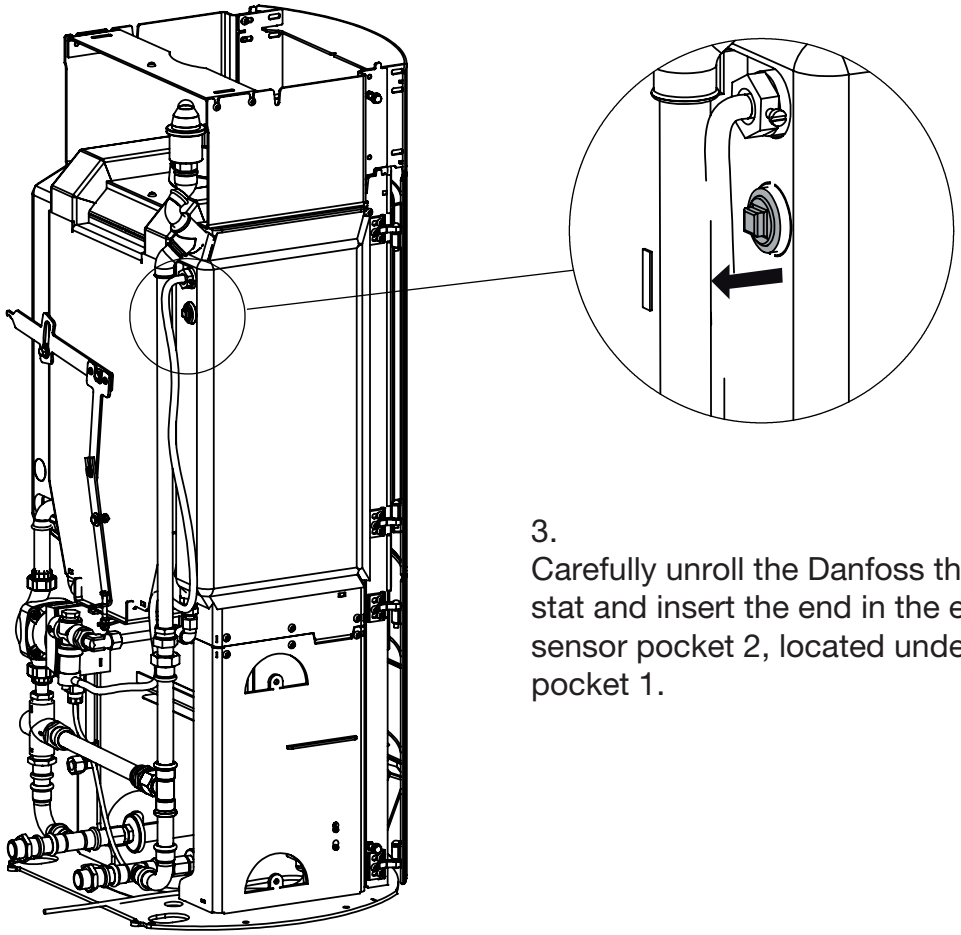

3.
Carefully unroll the Danfoss thermostat and insert the end in the empty sensor pocket 2, located under pocket 1.

1.10 APK kit installation

Step 9

1.
Unscrew the plug from sensor pocket 2.

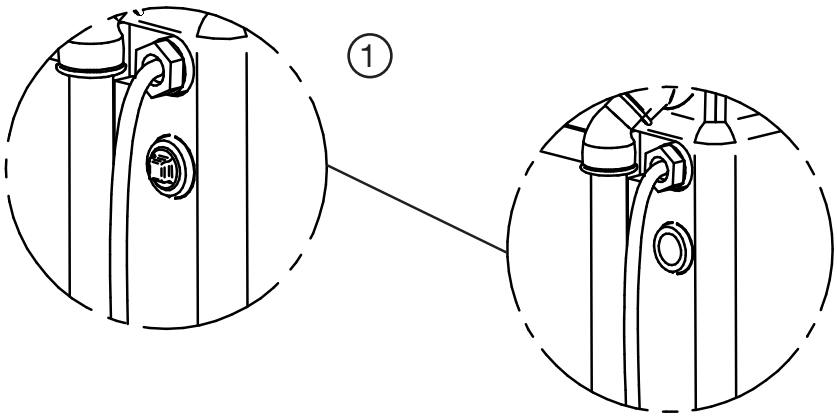

2.
When inserting the end of the thermostat in sensor pocket 2, assemble its five components as illustrated and in this order:

A -> B -> C -> D -> E

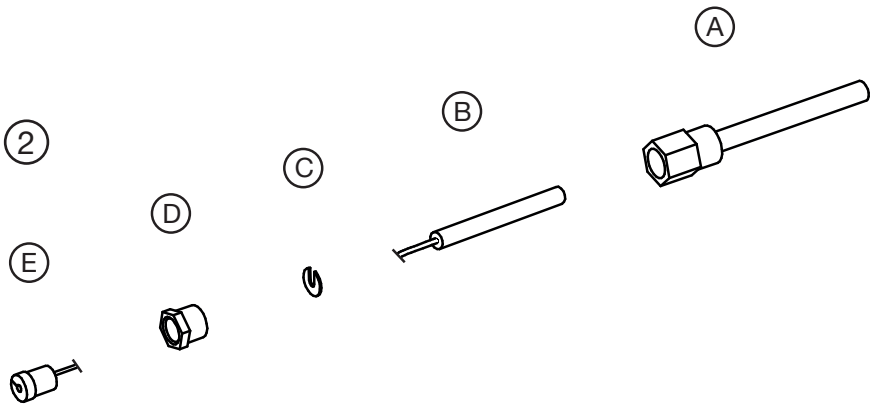

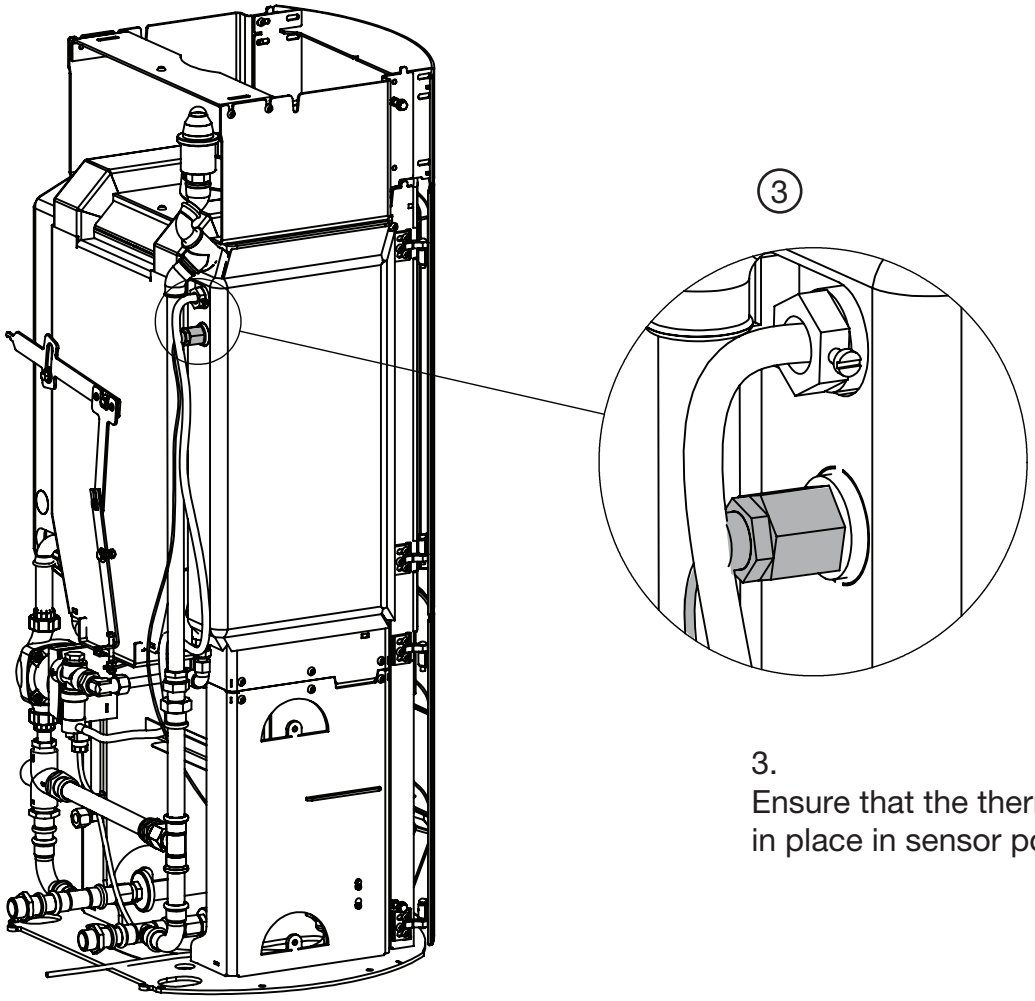

3.
Ensure that the thermostat is securely in place in sensor pocket 2 and sealed.

1.11 Installation recommendation central heating system

Arrangement:

1) Heta wood-burning stove.
2) Radiator.
3) Hot-water tank.
4) Manometer must show water pressure of at least 1 bar. Read the manometer on the front left side of the stove.
5) The safety valve discharge must be unobstructed.

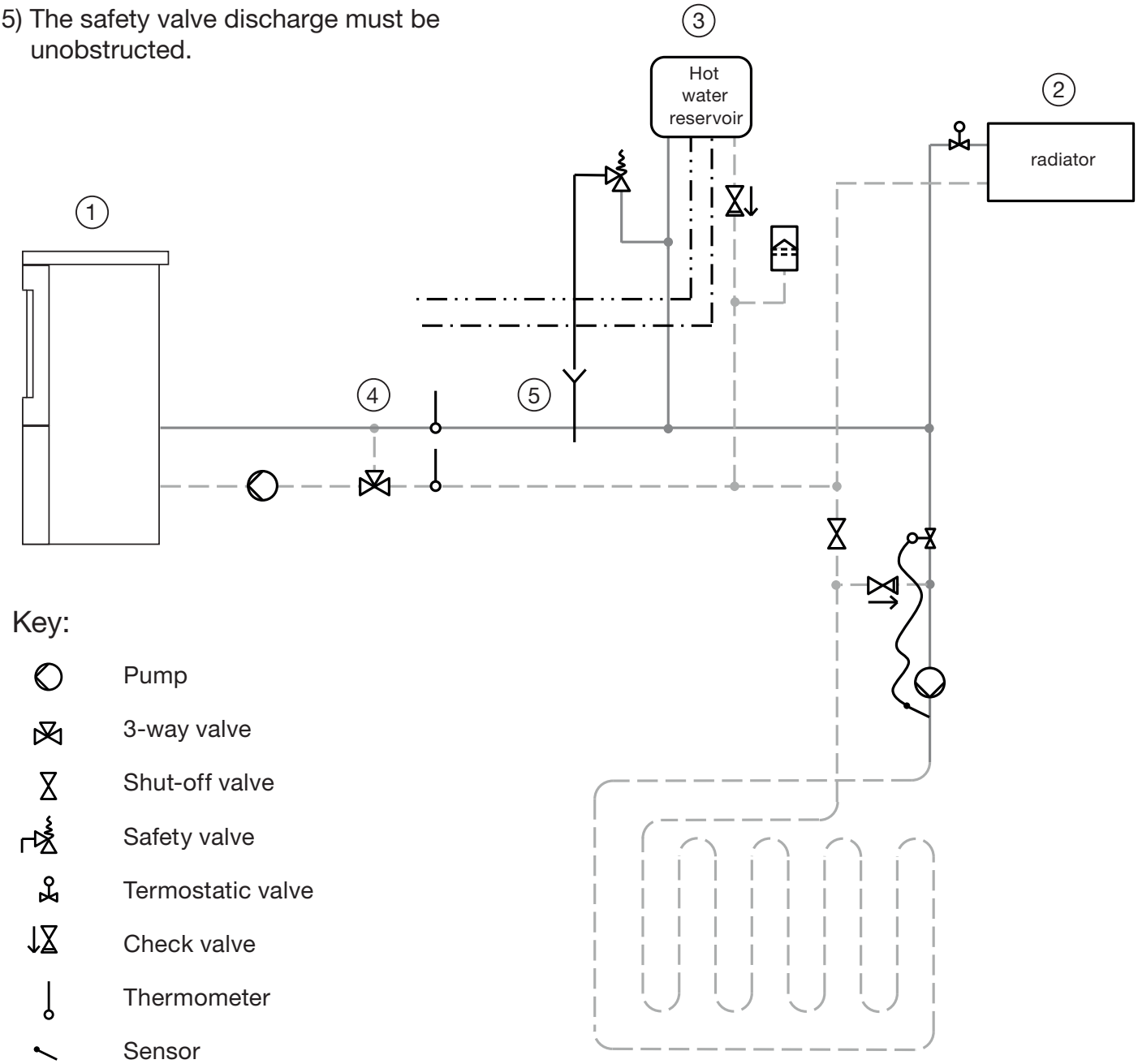

Key:

- Pump
- 3-way valve
- Shut-off valve
- Safety valve
- Termostatic valve
- Check valve
- Thermometer
- Sensor
- Closed expansion tank

- Flow
- Return
- Domestic cold water
- Domestic hot water
- Safety valve discharge

1.12 Installation recommendation central heating system with a solar collector

Key:

- Pump
- 3-way valve
- Shut-off valve
- Safety valve
- Termostatic valve
- Check valve
- Thermometer
- Sensor
- Closed expansion tank

- Flow
- Return
- Domestic cold water
- Domestic hot water
- Safety valve discharge

Arrangement:

1) Heta wood-burning stove.
2) Radiator.
3) Hot-water tank.
4) Manometer must show water pressure of at least 1 bar. Read the manometer on the front left side of the stove.
5) The safety valve discharge must be unobstructed.

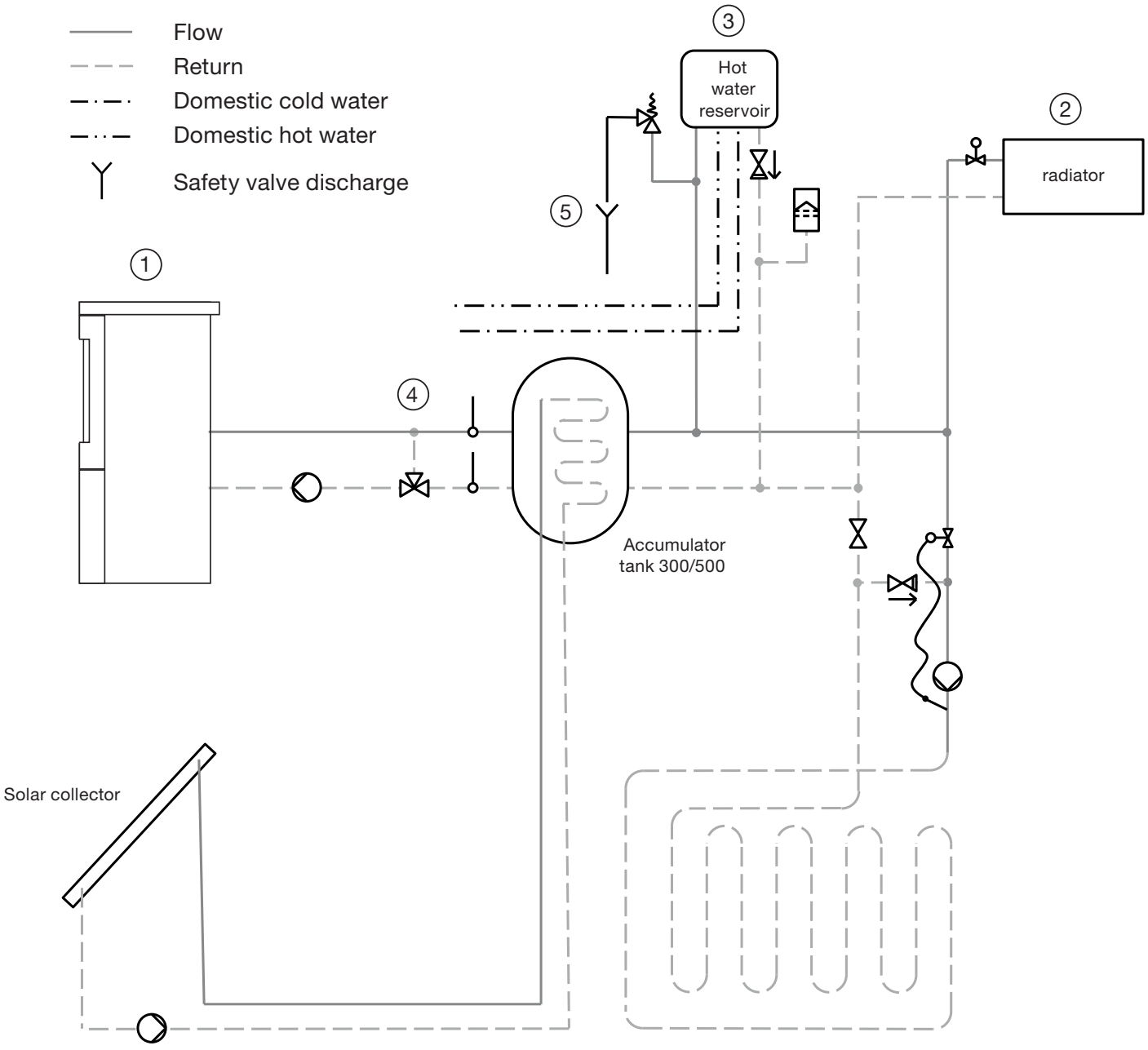

1.13 Installation recommendation central heating system (return)

Arrangement:

1) Heta wood-burning stove.
2) Radiator.
3) Manometer must show water pressure of at least 1 bar. Read the manometer on the front left side of the stove.
4) The safety valve discharge must be unobstructed.

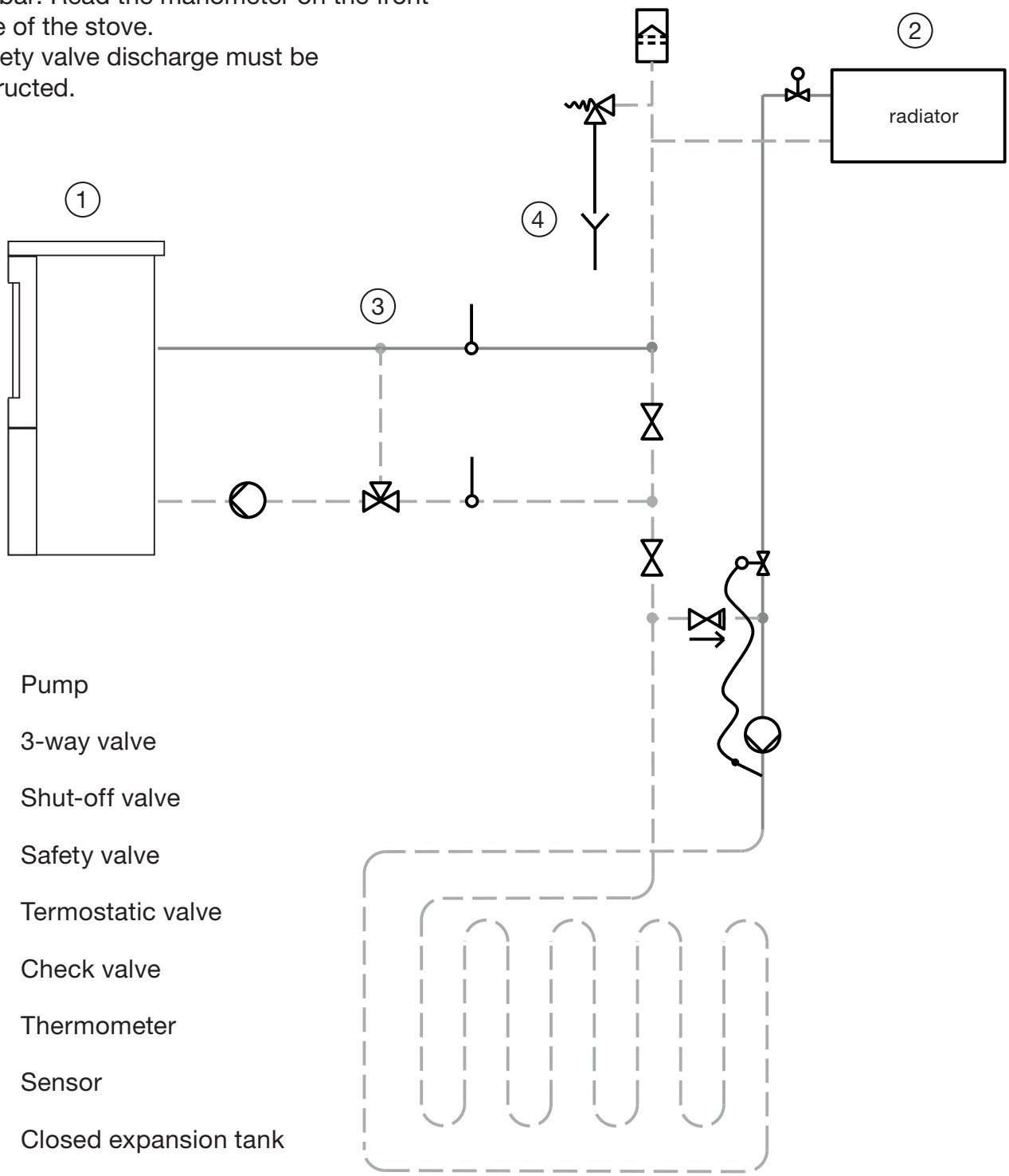

Key:

- Pump
- 3-way valve
- Shut-off valve
- Safety valve
- Termostatic valve
- Check valve
- Thermometer
- Sensor
- Closed expansion tank

- Flow
- Return
- Domestic cold water
- Domestic hot water
- Safety valve discharge

1.14
Statutory safety requirements

Installation must be carried out by an authorised plumber/electrician. These instructions must be observed, otherwise all warranty will be void.



Safety instructions must be followed correctly to avoid serious damage or injury.

In Denmark, observe:
The current legislative requirements.

In other countries, observe:
The current legislative requirements.

1.15 Warranty claim conditions

We have worked hard to deliver a quality Danish product, subject to rigorous inspection. In the un likely event that material or manufacturing defects are discovered:

Heta provides manufacturer warranty in accor dance with the applicable commercial law. Simp ly contact your dealer, presenting your invoice, and they will contact the manufacturer.

The installing tradesman is responsible for instructing the consumer how to operate and maintain the wood-burning stove. The Danish Working Environment Authority stipulates that the user guide must be stored in proximity to the wood-burning stove.

If the stove fails to operate correctly, contact the installing tradesman.

1.16 Nameplate

When contacting your dealer or Heta Technical Service, you must specify the model and serial number on the stove.

Both of these are shown on the nameplate.
On a Scan-Line 805 series this is located:
1) On stoves with an ash pan door, the name plate is on the inside of the bottom front door.

1.17 Service and Warranty

Service

Contact your dealer for service or assistance. Where this is not possible, consumers are always welcome to contact Heta Technical Service directly on +45 9663 0600 or via email at heta@heta.dk

The warranty covers:
New stoves shipped from the factory designed for private households and used as directed. Manufacturing or material defects, if these are discovered through normal use of the product.

The warranty does not cover:
Faults or damage arising directly or indirectly from overload, incorrect operation, misuse, careless handling, lack of maintenance, incorrect installation or connection, voltage uctuations and electrical disturbances, or repairs carried out by anyone other than an authorised Heta dealer. Faults or damage arising from the commercial or other use of products designed for private households.

Compensation for any consequential losses, including damages to other objects, people, operating losses etc., except where stipulated by law.

1.18 Troubleshooting

A number of technical and operational issues may occur during and after installation of an aqua wood-burning stove.

Since we continually accumulate experience and add good advice for handling these, this information will only be available on our website.

1.19 Spare parts

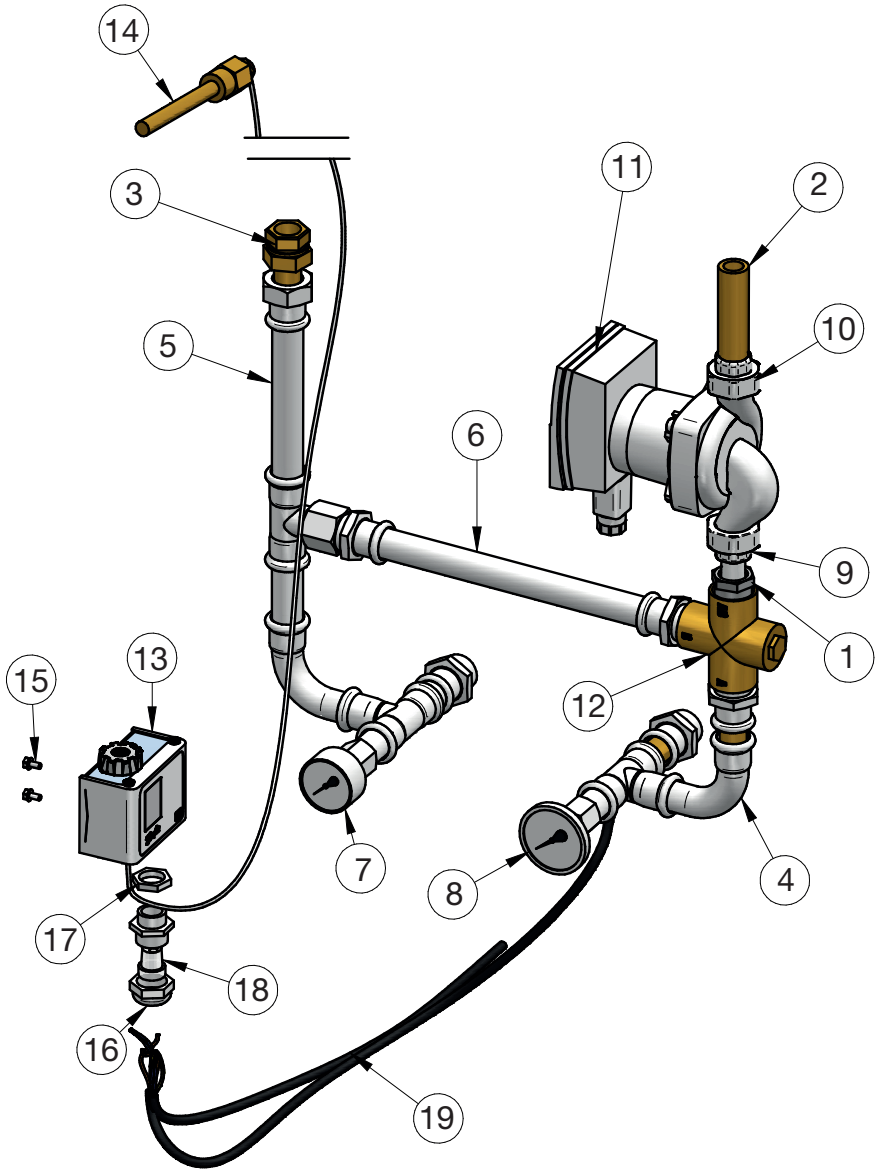

No.	Part Number.	Title	Quantity
1	0006-3005	Brass nipple sleeve 3/4” - 1/2”	1
2	0006.3006	Brass nipple pipe 1/2” - 80 mm	1
3	0006-3007	Radiator union 1/2” straight	1
4	0006-5032	Returm-side pipe set	1
5	0006-5033	Supply-side pipe set	1
6	0006-5034	Middle pipe set	1
7	0006-5035	Thermo-manometer 4 bar	1
8	0006-5036	Thermometer 1/2” x 63mm 0-120 degree	1
9	0006-5037	Pump union bottom 1/2” for Wilo pump	1
10	0006-5038	Pump union top 1/2” for Wilo pump	1
11	0006-5039	Wilo Yonos Pico 15.1-4-4164000	1
12	0006-5040	ModvlvS 740 series 55°C three-way valve	1
13	0006-5041	Danfoss KP78 (060L1184) immersion thermostat	1
14	0006-5042	Danfoss T/RAVV/RT immersion pocket	1
15	0008-0038	M4 x 10	1
16	0010-0306	M20 union	1
17	0010-0307	M20 lock nut	1
18	0010-0308	Multi-hole M20 2x5 packing	1
19	5032-0027	SL 805 Aqua wiring harness	1