OPERATING AND INSTALLATION INSTRUCTIONS

SCAN-LINE 95-100 SERIES

www.hetaheating.com

ECODESIGN READY

HETA

GB

DANISH DESIGN . DANISH QUALITY . DANISH PRODUCTION

Congratulations on your new wood stove, we are confident that you will be more than satisfied with your new Heta stove. Especially if you follow the following advice and instructions.

Scan-Line 95 and Scan-Line 100 series have been approved according to the EN 13240, NS 3058, NS 3059. These approvals, means that the wood stove meets a variety of specifications and requirements, ensuring it is made of quality materials, minimum environmental impact and that it has an optimum fuel economy.

The above declared values apply to all variants of the Scan-Line 95 and Scan-Line 100 series.

Operating Instructions
Contents

Before installation 3-4
1. Operating instructions 5
1.1 Before using 5
1.2 First firing 5
1.3 Regulating the airflow 5
1.4 Lighting the stove 5
1.5 Refueling 5
1.6 Emptying the ash 6
1.7 Reduced burning 6
1.8 Risk of explosion 6
1.9 Draft conditions in the chimney 6
1.10 Fuel 7
1.11 Operational problems 8
1.12 Chimney fires 8
1.13 Maintenance 8
1.14 Cleaning the glass 8
1.15 Troubleshooting 9
1.16 Diagram for the maintenance 10
1.17 Garantee 10
1.18 Lubricate the moving parts of the stove 11
1.19 Cleaning/Replacing bicks after chimney sweeping 12
1.20 Stove data table EN 13240 13
1.21 Parts Scan-Line 95 14
1.22 PartsScan-Line 100 14
2. Installation Instructions 16

Heta A/S
Jupitervej 22,
DK-7620 Lemvig

Phone: +45 9663 0600
E-mail: heta@heta.dk

Copyright © 2014
Heta is a registered
trademark of Heta A/S

Printed in Denmark
Subject to printing errors
and changes.

20.08.2025
0037-1366 Version 2,1

BEFORE INSTALLATION

Heta wood stoves are quality products, therefore, your first impression is very important! We have a good logistics network, which transports Heta products with great care for our dealers. Nevertheless, when in transport or handling, damage of the often-heavy stoves can occur. It is important that upon receipt check your Heta product completely and report any damage or defects to your dealer.

The packaging must be disposed of as follows:
Wood is untreated and able to burn in the stove.
Plastic and cardboard you can drop off at your local recycling center.

Transportation safety devise.

Regarding Scan-Line 95 and Scan-Line 100 on a turnable pedestal

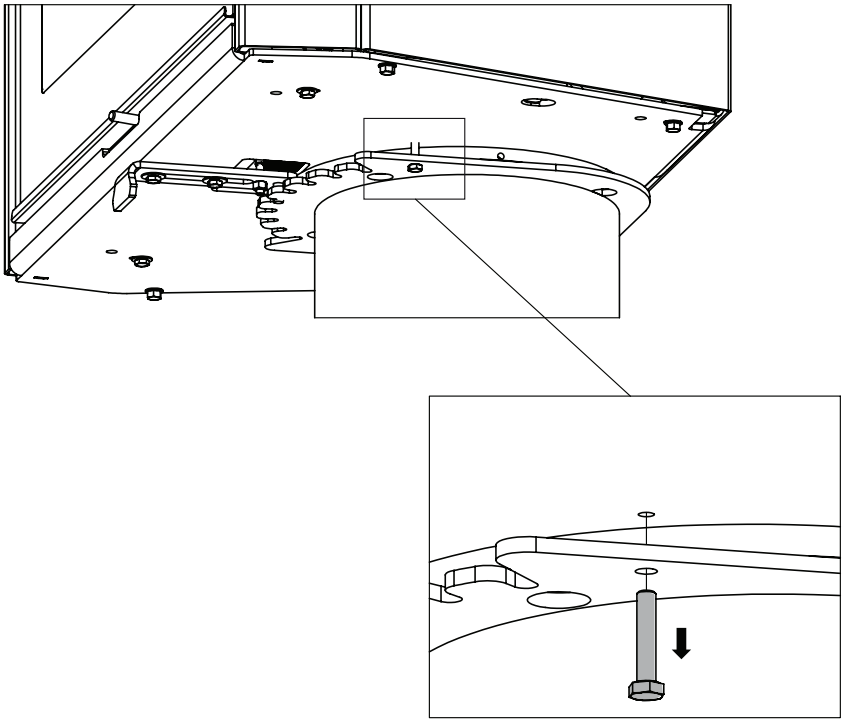

The screw must be removed before the stove is used/turned!

With your new wood stove you should find the following:

Operating / Instruction manual	
Heta glove 0023-9002	
Data plate	

Q.C. check	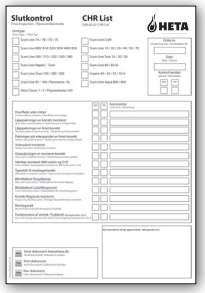
Graphite spray for lubrication 0027-0130	

Required tools are not supplied.

1. OPERATING INSTRUCTIONS

1.1 Before using

Before the wood stove is used make sure required installation conditions, are met.

See page 16.

1

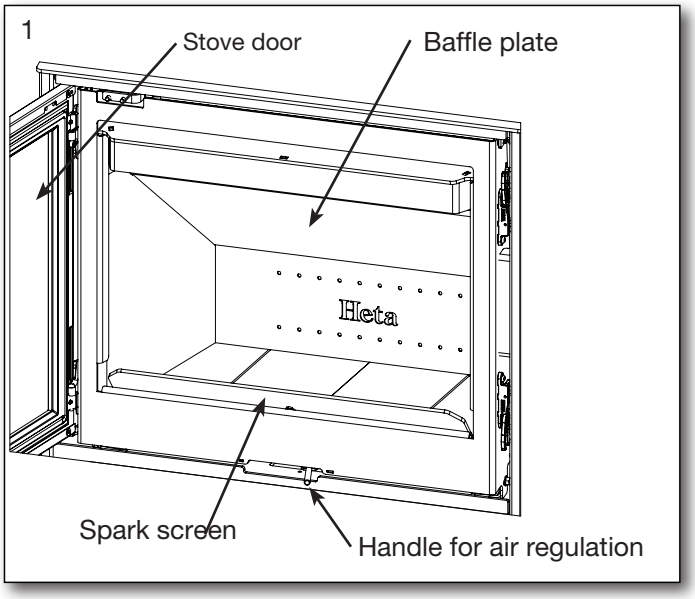

1.2 First firing

The stove paint is fully cured from the factory, but a minor unpleasant odour could still arise.

1.3 Regulating the airflow

To adjust combustion airflow, use the handle at the front under the door. Combustion air flow is fully open when the handle is as far as possible to the right. To close gradually, slide the handle to the left. Fig. 2.

2

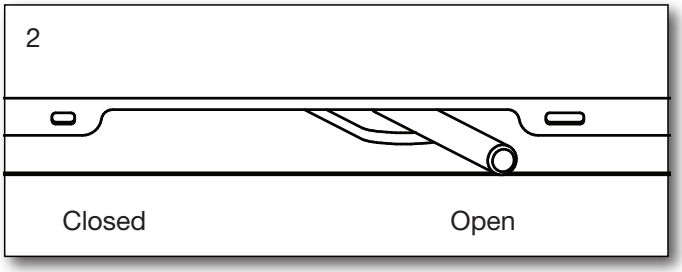

1.4 Lighting the stove

Place two pieces of wood on the bottom. Stack kindling on top in layers with air between. Setting fire starter (bag, brick, paraffin) on the top, now you are ready to light the fuel. The flames must work from the top down. Fig. 3.

The use of lighter fluid, oils or any liquid fuels is strictly forbidden from use in a wood stove.

3

Fully open the combustion air and leave the door ajar (about 1 cm open).
Once the fire is established and the chimney is hot (after about 3-5 minutes) closed door and regulate the air into operating position. We recommend, all of the first fuel is burned with the combustion air fully open in the operating position. This ensures the stove and chimney are thoroughly heated.

Startup/Lighting
Scan the code and select a language.

1.5 Refueling

Refueling of your stove should be done while there is still a good layer of embers. Distribute the embers with the majority of them to the front. Place pieces of wood equivalent to about 1,9 kg (Scan-Line 95) and about 2,3 kg. (Scan-Line 100) on top of the embers perpendicular to the door.

Open the combustion air completely and possibly. the door ajar (it is not necessary to keep the door ajar, but it can accelerate the ignition of the wood). Fig. 4.

The wood will then ignite within a very short time (Typically 1 to 3 minutes). Once the fuel is Ignited. Close the door and regulate the air back to operating air. When the fire is well established, you can now regulate the operating air to the desired combustion level.

4

Nominal heat out-put is 7,2 kW for Scan-Line 95 and 9,9 kW for Scan-Line 100, equivalent to the operating air at about 80% open.

The door must be closed during operation.

Ensure when refueling that the wood is not too close, it will cause poorer combustion, less heat out-put and lower efficiency.

The fuel load, must be maintained below the top series of air holes and within the outer vent in each side. Fig. 5

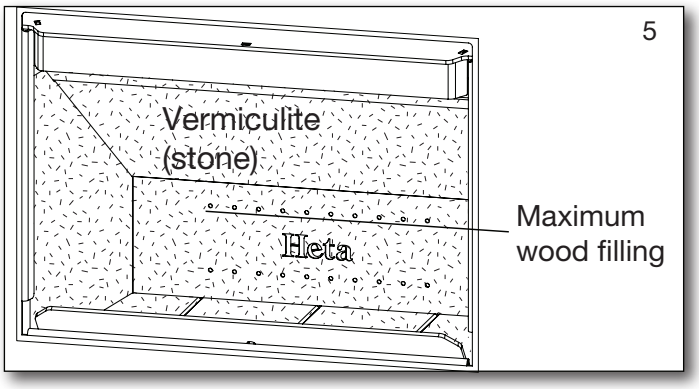

When refueling be careful to place the fuel into the combustion chamber gently, (use the provided glove). By not doing so you risk cracking or breaking the vermiculite.

If there is reduced draft in the chimney, we recommend opening a window at stoking. This will give better ventilation to the room and more oxygen for combustion.

1.6 Emptying the ash

Be careful not to damage the vermiculite when the removing the ash.

Be careful when emptying the ashes out. There can be hot embers left for a long time.
Never empty ash into a combustible container.

It is an advantage for the next firing to leave a layer of ash lying in the bottom of the firebox.

When refueling, a maximum load of wood may not exceed 2.2 kg for Scan-Line 95 and 3.2 for Scan-Line 100.
If this amount is exceeded, the guarantee will be void.

1.7 Reduced burning

The stove is, designed for intermittent use.

It is important to maintain the layer of hot embers. Lower heat out-put occurs when no flames come from the tree, when it is becomes glowing charcoal.

If you are looking for less heat out-put, achieve this by fueling with smaller volumes of wood and a lower operating air. You may not completely close the operating air during firing.

Be aware that the stove will naturally soot if the operating air is too low. This is not good for the environment. There is also a risk for the glass, the chimney and other parts will become sooted.

By a combination of the above and possibly burning damp wood. Can lead to high levels of soot that it becomes sticky. Causing the sealing of the door to tear off when opening the door the next day.

Never use the stove if the seals are loose.

1.8 Explosion!!!

It is very important never to leave The stove after start up or refueling, before the fire is established. (Typically 1 to 3 minutes)

Explosion can occur if filled with too much fuel in the stove, the production of large volumes of gas, which can explode if the air supply becomes too low.

Warning!

One must always use cation around the stove seen, as it gets very warm during use. (In excess of 90° C).

Children should avoid contact with the stove.

Setting up a fence if you have small children may be necessary.
Do not place flammable objects like drying racks, furniture, curtains too close to the stove..

1.9 Draft conditions and the chimney

Poor draft will not allow the stove to burn, as it should. The glass can soot, requires cleaning of

the chimney more often, smoke can escape out when the door is open and it gives poor fuel efficiency. Leading to unnecessary polluting of the environment.

Good draft will allow the stove to achieve optimal combustion and the highest possible efficiency. Heta wood stoves are constructed so that it itself provides an optimal blend of combustion air. This provides a high efficiency/heat, clean glass and low environmental impact.

Minimum chimney draft for Scan-Line 95 and Scan-Line 100 is 13 PA. It is the draft that the stove has been tested and approved on. The minimum draft is necessary to provide clean burning, beautiful flame picture, as well as achieving the rated efficiency.

There is a risk of smoke escaping into the room if the door is opened during vigorous firing, or if there is a lack of air supply to the room, for ex. if an extraction fan is in use.

Flue gas temperature at the rated output is for Scan-Line 95 273°C and for Scan-Line 100 268°C relative to 20° C.

Flue gas flow is:
Scan-Line 95: 6.3 g/sec. Corresponding to 22.6 m^3 / hr of combustion air by burning 2.09 kg of wood and Scan-Line 100: 7.9 g/sec. Corresponding to 28.4 m^3 / hr of combustion air by burning 2.91 kg of wood.

The chimney height and diameter, as well as the temperature difference between the flue gas and outside temperature generates the chimney draft. Chimney insulation is therefore important as new efficient stoves create lower flue temperatures. Wind and weather conditions also influence draft, in some cases it may be disadvantageous wind direction, combined with the position of the chimney can cause negative draft (it blows through the chimney), causing smoke escape from the stove.

6

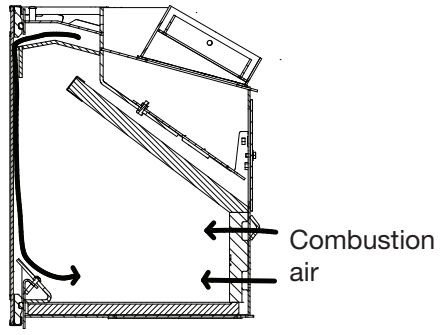

Before using after a long period of inactivity, check that the chimney is free for any blockages. (soot build-up, bird nests, leaves etc.).

Reduced draft can occur when:

- The temperature difference is too small between smoke gasses and outdoor
- To short of a chimney
- The outside temperature is high, and indoor temperature is low f. ex. in summer
- False air in the chimney
- Chimney is blocked
- Air tight house (lack of combustion air supply)
- Poorly placed chimney for the surroundings, for ex. the ridge and trees may cause turbulence.

Good draft occurs when:

- The difference in temperature in the chimney (warmer) and outside temperature (colder)
- It is clear weather
- The chimney has the right height min 4 meters above the stove, and clear of the roof ridge

1.10 Fuel

Your new stove is EN approved for firing with wood fuel. You must therefore only burn clean, dry wood in your stove. Never use your stove to burn driftwood, as this may contain a lot of salt which can damage both the stove and the chimney. Similarly, you must not fire your stove with refuse, painted wood, pressure-impregnated wood or chipboard, as these materials can emit poisonous fumes and smoke.

Correct firing using well seasoned wood provides optimal heat output and maximum efficiency. At the same time, correct firing prevents environmental damage in the form of smoke emissions and reduces the risk of chimney fires. If the wood is damp and inadequately seasoned, a large proportion of the energy in the fuel will be used to vaporize the water, and this will all disappear up the chimney. Thus, it is important to use dry, well seasoned wood, i.e. wood with a moisture content of less than 20 %. Achieve this by storing the wood for 1–2 years before use.

Pieces of firewood with a diameter of more than 10 cm should be split before before storing. The pieces of firewood should be of an appropriate length (approx. 19-25 cm) so that they can lie flat on the bed of embers.

If you store your wood outdoors, it is best to cover it.

Examples of fuel values

for different woods and their typical densities per cubic meter, specified for 100% wood with a moisture content of 18%.

Wood	kg/m³	Willow	kg/m³
Beech	710	Wood	560
Oak	700	Alder	540
Ash	700	Scotch pine	520
Elm	690	Larch	520
Maple	660	Lime	510
Birch	620	Spruce	450
Mountain pine	600	Poplar	450

It is advised not to use oil-containing woods like teak tree and mahogany, as this can cause damage to the glass.

Heating value in wood

You have to use about 2.4 kg normal wood to replace one litre of heating oil. All woods have almost the same heating value per kg, which is about 5.27 kW/hour for absolute dry wood.
Wood with a moistness of 18% has a efficiency of about 4.18 kW / hour per kg, and one litre heating oil contains about 10 kW / hour.

CO_2 release

At combustion 1000 litres of heating oil forms 3.171 tons CO_2. As wood is a CO_2 neutral heat/energy source, you save the environment about 1.3 kg CO_2 every time you have used 1 kg normal wood.

1.11 Operational problems

The chimney must be swept at least once a year, we recommend the use of a NACS (national association of chimney sweeps) registered chimney sweep.

In the event of smoke or malodorous fumes are being produced, you must first check to see whether the chimney is blocked.

The chimney must, of course, always provide the minimum draft necessary to ensure that it is possible to regulate the fire. Please note, however, that chimney draft is dependent on the weather conditions. In high winds, the draft can become so powerful that it may be necessary to fit a damper in the flue gas pipe to regulate the draft.

When cleaning the chimney, soot and other deposits may come to fall on the baffle plate, remove and clean it. In cases where the wood burns too quickly, this may be due to excessive chimney draft. You should also check to make sure that the door seal and ash pan seal is intact and correctly fitting.

If the stove it generating too little heat, this may be because you are firing with wet wood. In this case, much of the heating energy is used to dry the wood, resulting in poor efficiency, potentially damaging the vermiculite and an increased risk of soot deposits in the chimney.

1.12 Chimney fire

In case of a chimney fire, which often results from incorrect operation/maintenance or prolonged use of damp wood, close the door and the air supply completely, to help slow/smother the fire. Call the fire department.
The stove and chiminey must be inspected before use again.

1.13 Maintenance

The surface of the stove is treated with a heat-resistant paint. The stove should be cleaned with a damp cloth.
Any damage to the surface in the form of chips or scratches can be repaired using touch-up paint, which is available in spray cans.

1.14 Cleaning the glass

Incorrect firing, for example using wet wood, can result in the viewing window becoming covered in soot.

This can be removed easily and effectively using glass cleaner applied using a cloth.

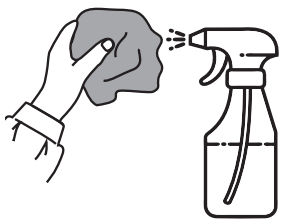

Never apply spray directly to the glass.

1.15 Troubleshooting table - applies to all stove types

Fault	Cause	Troubleshooting	Solution
Lighting problems. When the stove is cold, smoke seeps into the room. Once the combustion chamber has heated up, the stove burns well.	Inadequate chimney draft. The chimney only has sufficient draft when it is hot.	You can test using a lighter whether flame is drawn into the combustion chamber.	Improve the chimney.
The stove burns poorly after the warm-up phase, and the glass slowly soots up.	Soot in the flue pipe.	Check the flue pipe regularly, as the problem arises slowly.	Clean regularly, and limit the use of horizontal flue pipes. Do not use firewood which generates large quantities of ash.
If the stove burns poorly after start-up, and the glass slowly soots up.	Inadequate chimney draft.	The fault usually already occurs during lighting. Measure the chimney draft.	Improve the chimney draft.
	Insufficient air supply.	Check the air supply.	Read the operating instructions and instruct all users.
	Damp wood.	Use clean, dry wood with a maximum moisture content of 20%.	Firewood should ideally be dried for at least one year after splitting.
	Firewood pieces too large.	Optimal size – see the section for firewood, max. diameter 10 cm.	Use smaller pieces of firewood.
	Insufficient air supply to the room. Range hoods, airtight windows, etc.	Ensure there is sufficient fresh air supply, open a window, check the outdoor air supply.	Depending on the cause, windows must be opened or the outdoor air connection cleaned.
	Insufficient air supply to the room. Range hoods, airtight windows, etc	Ensure there is sufficient fresh air supply, open a window, check the outdoor air supply.	Depending on the cause, windows must be opened or the outdoor air connection cleaned.
The vermiculite in the combustion chamber is becoming very worn.	Wood and flue gases wear down the vermiculite.	Investigate whether the wear is normal.	Normal wear and minor cracks are of no significance. It should be replaced when the steel of the combustion chamber is visible.
Too rapid combustion.	Too much chimney draft.	To test, you can open the cleaning hatch, but remember to close it again.	Measure the chimney draft and install a damper in the flue pipe if necessary.
	The door or ash pan/drawer seal is defective.	While cold, close a piece of paper in the door – the seal should hold the paper gently in place so it does not fall out by itself. Normal wear.	Replace the seal.
The vermiculite in the combustion chamber is cracked.	Shocks or impacts while adding firewood.	Normal wear	Cracks only have cosmetic significance. Replace when the steel of the combustion chamber is visible.
Steel surfaces in the combustion chamber have oxidised.	The temperature in the combustion chamber is too high.	Unsuitable fuel is being used (such as coal). Check the quantity of firewood being used, read the operating instructions.	If there are clear cracks or weaknesses in the stove body, it must be replaced.
The stove whistles	Too much chimney draft	To test, you can open the cleaning hatch, but remember to close it again.	Install a damper.
The stove 'clunks'	Usually due to tension in the metal plates.	Generally only occurs while heating up and cooling down.	Adjust the metal plates.
The stove ticks	Normal expansion and contraction due to temperature changes.	A normal sound.	Ensure that the temperature in the combustion chamber is as constant as possible.
The stove creaks.	The temperature in the combustion chamber is too high.	Use less firewood. Also check the seal in the ash pan/drawer.	See the operating instructions.
The stove smells. The surface is steaming.	The paint on the stove surace is not yet fully hardened.	See the operating instructions regarding the first firing.	Ensure there is sufficient ventilation.
Condensation in the combustionchamber.	Moisture in the vermiculite.	Check the condition of the vermiculite.	Evaporates by itself after the stove has been lit a few times.
	Damp wood.	Measure the moisture content.	Use dry firewood.
Condensation from the flue pipe.	The pipe is too long or the chimney is too cold.	Check the flue pipe's length and heat loss.	Improve the flue pipe, insulate the chimney.
	Damp wood	Measure the moisture content.	Use dry firewood.
Moving parts creak.	Needs lubercation.	What part.	Lubercate with graphite spray.

1.16 Diagram for the maintenance

	Stove Owner					Qualified Technicia	
Maintenance / Period	Before Autum	Daily	2-3 days	30 days	60-90 days	1st Year	2st Year
Cleaning the chimney (see. Chimney)	C						
Cleaning the chimney and stove	C				C		
Cleaning the stoves firebox	C	VI			C		
Cleaning combustion air intake	C				C		
Cleaning ash bucket (small)	C		VI				
Cleaning ash bucket 8 Liter	C		VI	C			
Cleaning of the firebox	C	VI		C			
Checking / switch, gasket for door	C/S	VI					C/S
Checking / changing, gasket for glass	C/S	VI					C/S
Checking / changing gasket for flue pipe	C/S	VI					C/S
Checking / changing vermiculite	C/S	VI					C/S
Lubricate hinges	L	VI			L		
Lubricate lock	L	VI			L		

C = Cleaning C/S = Checking /Switch
L = Lubricate VI = Visual Inspection, pos. cleaning/replacing/adjusting

1.17 Guarantee

Heta wood stoves, are subjected to a strict quality control during production and before delivery to the dealer. Therefore, the duration of the warranty is **5 years** on this product, covering manufacturer's defects, **2 years** on electronic components**,** and a **3 months** total warranty for seals, vermiculite and glass from the date of sale from the dealer.

Claims concerning stoves older than **3 months**, will be assessed by our quality team on a one-by-one basis. Report all claims to your approved / authorised HETA dealer, who in turn will contact Heta to solve the claim. Any stoves purchased online or via a 3rd party carry a standard 1 year warranty with engineer visits and parts being chargeable. To file a claim please provide date of installation, picture of the silver data sticker, model and a description of the issue and pictures.

The guarantee does not cover:

- Wearing parts / fragile parts such as:
- Vermiculite elements in the combustion chamber.
- Glass
- Seals
- The cast bottom or shaking grate
- Surface or paint deteriorations due to excessive humidity, salinity or other aggressive environment
- Damage caused by improper use
- Transportation costs for warranty repair
- Assembly / disassembly of warranty repair
- Any secondary damages of the stove or it's environments due to negligence of any initial damages whether this damage is covered or not by the manufacturers guarantee.

Warning Inadequate installation, unauthorized alteration to the stove or the use of non-original parts will void the guarantee.

1.18 Lubricate the moving parts of the stove

Before using graphite spray, you should cover the exposed surfaces so that lubricants are applied only to the moving parts.

Always test the graphite spray on a hidden surface to make sure the can is working as intended.

Graphite spray should only be used on a cold stove.

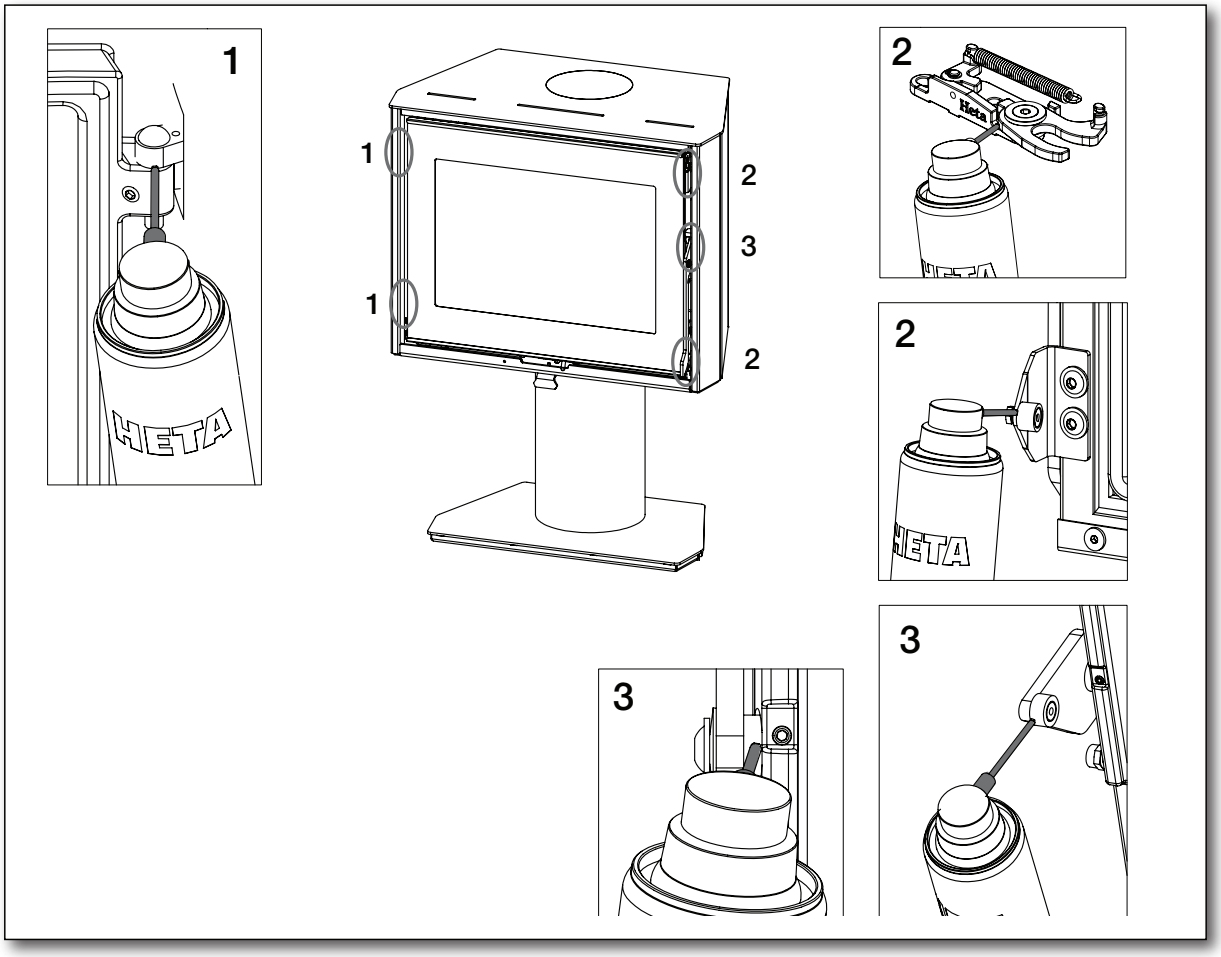

1.19 Cleaning after sweeping or before replacing vermiculite stones

Note: it may be necessary to clean/vaccum the holes and air ducts behind the rear stone

Removal sequence of stones.

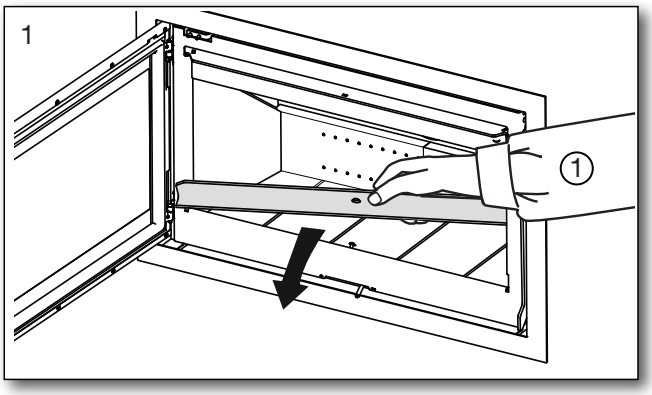

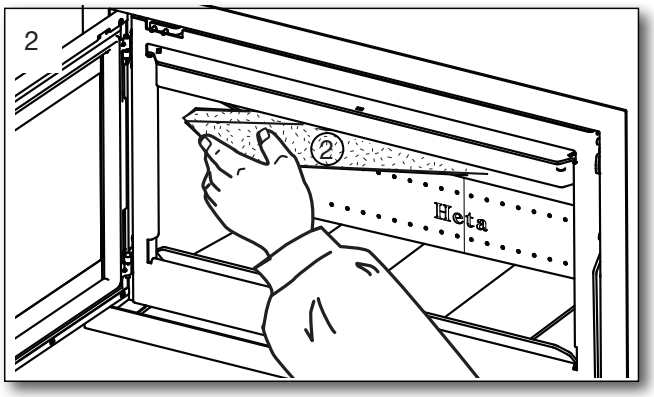

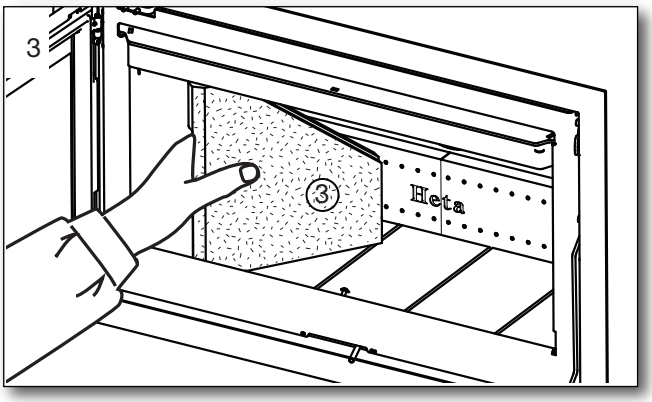

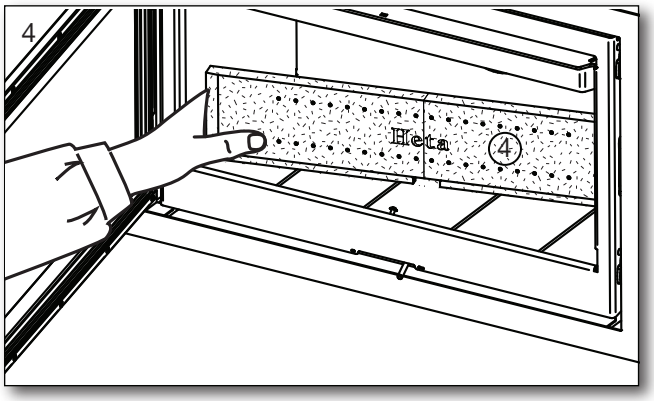

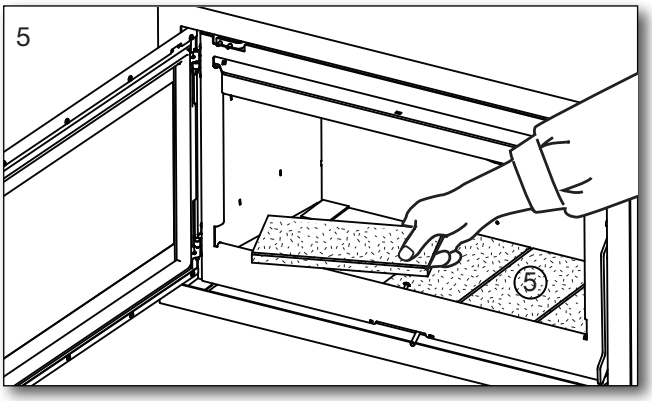

Replace in reverse order. Starting with Fig. 5.

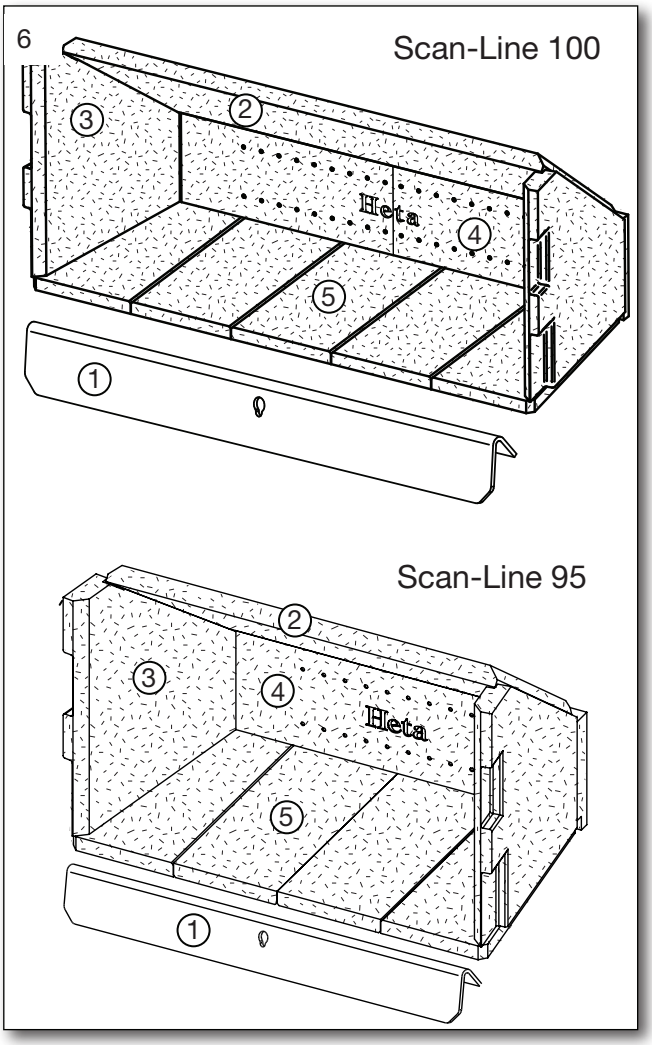

Rear stone

The rear stone on Scan-Line 100 is divided into two. They are held together by a bracket on the rear side which is pressed down into the recesses. Fig. 7.

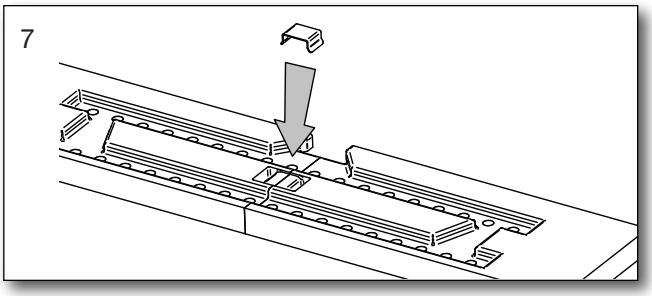

1.20 Stove data table in accordance with EN 13229-testing

Stove type Scan-Line Series	Nominal fluegas temperature, at smoke stub C°	Flue T400 Class Flue pipe mm	Fuel volume kg	Draft min. mbar	Nominal output tested kW	Heat output %	Stove weight kg
Scan-Line 95 serie	273	ø150	1,9	0,13	7,2	80	#
Scan-Line 100 serie	268	ø150	2,3	0,13	9,9	81	#1

Scan-Line 95 fixed pedestal 142 kg
Scan-Line 95 rotating pedestal 147 kg
Scan-Line 95 without pedestal 121 kg
Scan-Line 95R without pedestal 126 kg
Scan-Line 95H 156 kg

#1 Scan-Line 100 fixed pedestal 172 kg
#1 Scan-Line 100 rotating pedestal 177 kg
#1 Scan-Line 100 without pedestal 153 kg
#1 Scan-Line 100R fixed pedestal 177 kg
#1 Scan-Line 100R rotating pedestal 181 kg
#1 Scan-Line 100R without pedestal 157 kg

The nominal output is the output to which the stove has been tested.
The test was carried out with the combustion air 80%.

Stove type Scan-Line Series	A (dR) Behind the oven Insulated/ uninsulated flue pipe mm	B (dS) At the side Insulated/ uninsulated flue pipe mm	C (dP) To furniture Insulated/ uninsulated flue pipe mm	D (dS!) Corner distance Insulated/unin-sulated flue pipe mm	E (dB!) From door edge to floor * mm	F (dC) Above the oven (ceiling) Insu-lated/uninsu-lated flue pipe mm	(dB) Under the oven	(dF) In front of the oven floor
Scan-Line 95 serie	¤	¤	1100	¤	350	750	0(<65K)	0(<65K)
Scan-Line 100 serie	¤	¤	1200	¤	350	750	0(<65K)	0(<65K)

* If E is below 350 the floor material must comply with the European standard for fire safety A2-s1,d0

¤ See safety distances for the specific oven models.

1.21 Parts Scan-Line 95

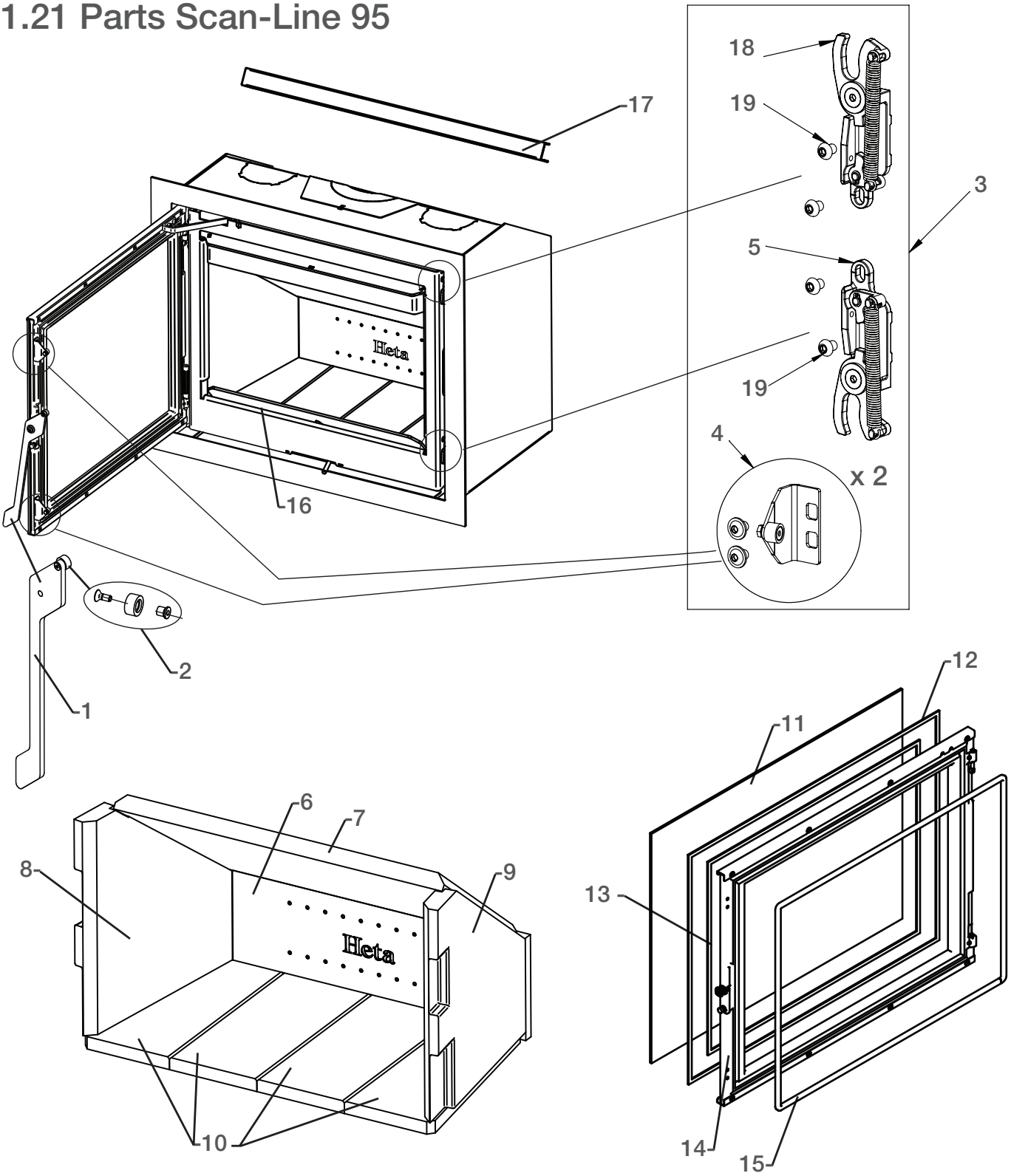

Pos.	No.	Name	Qty.
1	4020-0014	Handle	1
2	5013-0007	Rep. set for handle	1
3	6000-029547	Complete rep. set self-close after August 2024	1
4	5013-0005	Rep. set self-close, door	1
5	1513-0123	Lockware	1
6	0023-0126	Back stone	1
7	0023-0122	Baffle plate	1
8	0023-0124	Left stone	1
9	0023-0123	Right stone	1
10	1523-0076	Bottom stone set, complete	1

Pos.	No.	Name	Qty.
11	0021-0047	Glass (4x512x646)	1
12	0023-3010	Textile glass 6 mm with adhesive (2.31 m)	1
13	0023-3010	Textile glass 6 mm with adhesive (1.96 m)	1
14	4005-0037	Door, mounted	1
15	0023-3015	Glass seal 10 mm (2.11 m)	1
16	1019-0024	Spark screen	1
17	1027-0289	Support rail	1
18	1513-0124	Lockware	1
19	0008-0058	Screw M6x8	4

1.22 Parts Scan-Line 100

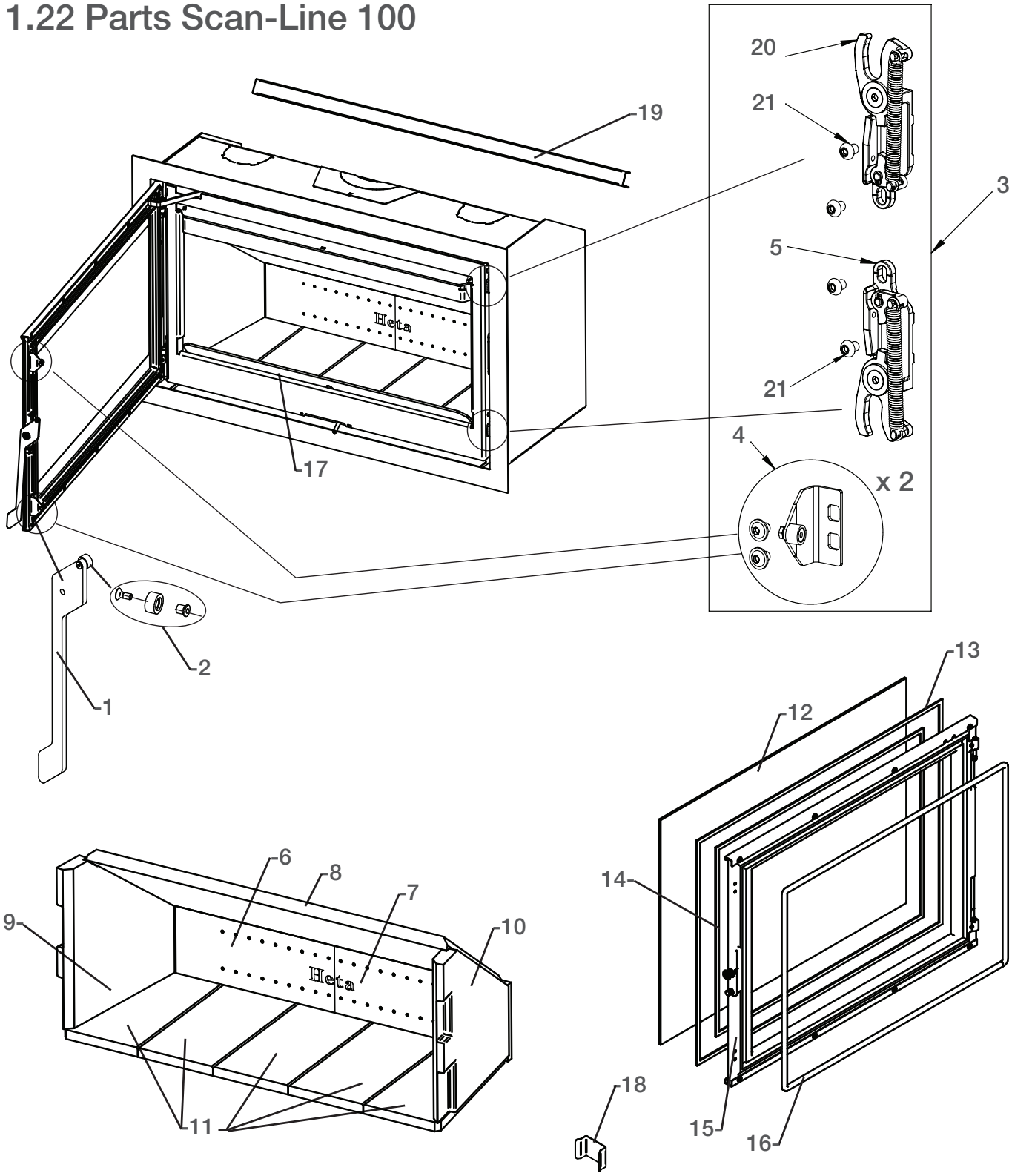

Pos. No.	Name	Qty.	Pos. No.	Name	Qty.
1 4020-0014	Handle with roller	1	12 0021-0048	Glass (4x512x906)	1
2 5013-0007	Rep. set for handle	1	13 0023-3010	Textile glass 6 mm with adhesive (2.8 m)	1
3 6000-029547	Complete rep. set self-close after August 2024	1	14 0023-3010	Textile glass 6 mm with adhesive (2.5 m)	1
4 5013-0005	Rep. set self-close, door	1	15 4005-0038	Door, mounted	1
5 1513-0123	Lockware	1	16 0023-3015	Glass seal ø10 (2.6 m)	1
6 0023-0129	Rear stone, left	1	17 1019-0025	Spark screen	1
7 0023-0149	Rear stone, right	1	18 1013-0697	Stainless steel clip	1
8 0023-0127	Baffle plate	1	19 1027-0290	Support rail	1
9 0023-0124	Left side stone	1	20 1513-0124	Lockware	1
10 0023-0123	Right side stone	1	21 0008-0058	Screw M6x8	4
11 1523-0075	Bottom stone set, complete	1			

Installation Instructions
Contents

2. Installation instructions 17
2.1 Distance provisions 17
2.2 Floor 17
2.3 Chimney connection 17
2.4 Combustion air and Ventilation 18
2.5 Stovedrawings/measurments Scan-Line 95 18-19
2.5 Stovedrawings/measurments Scan-Line 100 20-21
2.6 External fresh air 22
2.7 Connecting external air supply from below 23
2.8 Changing to a back outlet 24-25
2.9 Connecting external air supply from behind 26
2.10 Clearances for installation Scan-Line 95 serie 26-27
2.11 Clearances for installation Scan-Line 100 serie 28-29

3. Appendix A 30

EU Declaration of Conformity Scan-Line 95 serie 31
EU Declaration of Conformity Scan-Line 100 serie 32

Remember

The stove and chimney installation, must comply with local regulations, including those referring to national and European standards.

2. Installation instructions

The stove installation must be in accordance with national, European and possibly local regulations. You must follow local regulations with regard to installation of chimney and connection to the chimney. We recommend that you let a professional Heta dealer install the stove. Alternatively, you can ask the local chimney sweep before installation. Be aware that it is always the owner himself who has responsibility for ensuring that applicable rules are complied with.

A modern stove places heavy demands on the chimney due to the high efficiency. It may be necessary to enhance or even replace an old chimney.

Remember

1. Always ensure free access to any cleaning doors in a chimney.
2. Always ensure ample fresh air to the room.
3. Exhaust/extraction fans in the house can reduce or create negative draft in the chimney. Reduced draft can lead to the stove having adverse combustion properties. It may result in smoke coming out of the stove when the door is open. A negative draft due to an exhaust/extraction fan can cause the chimney to work in reverse, drawing smoke into the house because of the fan.
4. Any air vents must not be covered.

2.1 Distance provisions

There is a difference between installation next to flammable wall or non-flammable wall.

For non-combustible walls, a minimum of 5 cm is recommended between the oven and the wall for cleaning purposes behind the oven.

The minimum distance to combustibles can be found on the model plate provided with the stove or on page 13 of this manual.

2.2 Floor

You must ensure that the floor can support the weight of the stove and a top-mounted steel chimney.

In front of the fireplace stove, the substrate must consist of non-combustible material, for ex. Steel/glass plate, stone or tile floor. The size of the non-combustible surface must follow the applicable national and local regulations, and must protect against any impact from embers that might fall out of the stove. Protecting your floor from embers that may fall out of the oven.

Pay particular attention to the distance to flammable floors, which also applies even if a steel or glass plate is placed on the floor.

Distances see data table page 13.

2.3 The chimney connection

The chimney opening must follow national and local regulations. However, the area of the opening should never be less than 175 cm^2, which corresponds to a diameter of 150 mm. If a damper is fitted in the flue gas pipe, there must always be at least 20 cm^2 of free passage, even when the damper is in its “closed” position.

If local regulations permit, two contained stoves can be connected to the same chimney. However, you must abide by local regulations regarding the distance between the two connections.

The stove must never be connected to a chimney that is linked to a gas fire stove.

An efficient stove makes high demand on chimney properties – so always have your local chimney sweep evaluate your chimney.

Connection to a brick chimney

Brick a thimble into the chimney and seat the flue gas pipe in this.

The thimble and flue gas pipe must not penetrate the chimney opening itself, but must be flush with the inside of the chimney duct. Joins between brickwork, the thimble and flue gas pipe must be sealed with fireproof material and / or beading. Heta A/S stresses that it is of utmost importance that this is done correctly with very tight joints. As mentioned earlier, we recommend that setup and installation be left to a professional Heta dealer.

Connection to a steel chimney

The steel chimney must meet T400 at least.

When installing the chimney through the ceiling, national and local regulations must be followed regarding distances to flammable materials.

It is important that the chimney is mounted with a roof support so that the stove's top plate does not support the chimney (the stove is approved to be able to carry 20 kg.)

2.4 Combustion air and Ventilation

The stove is approved as a room air dependent stove in accordance with EN 13240. All the combustion air in the inset stove comes from the room in which it is fitted. However, by connecting a sealed air inlet to the stove's air intake connector, the stove can be supplied with external combustion air. In this respect, the following requirements must be met:

- Only approved materials may be used from the ventilation unit to the air inlet vent.
- The air inlet vent must be fitted correctly and insulated to prevent formation of condensate. The cross section of the vent and grille must be at least 78 cm².
- If the vent leads out into the open air, please note that the grille must be fitted with suitable wind protection. There must be no risk that the grille can get clogged by leaves, etc.
- The stove has been tested with 3 m of 100 mm pipe, with 3 90 degree bends.

Ventilation

Adequate ventilation must be provided in accordance with building regulations (Doc J Oct 2010) especially when installing in newer build properties when the stove is not going to be installed to an outside air supply.

2.5 Stovedrawings/measurments

Scan-Line 95

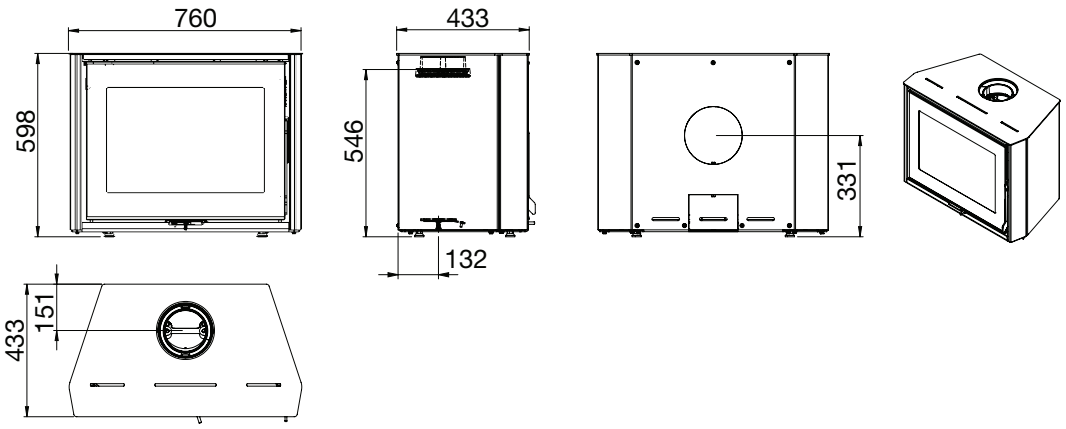

Scan-Line 95 R

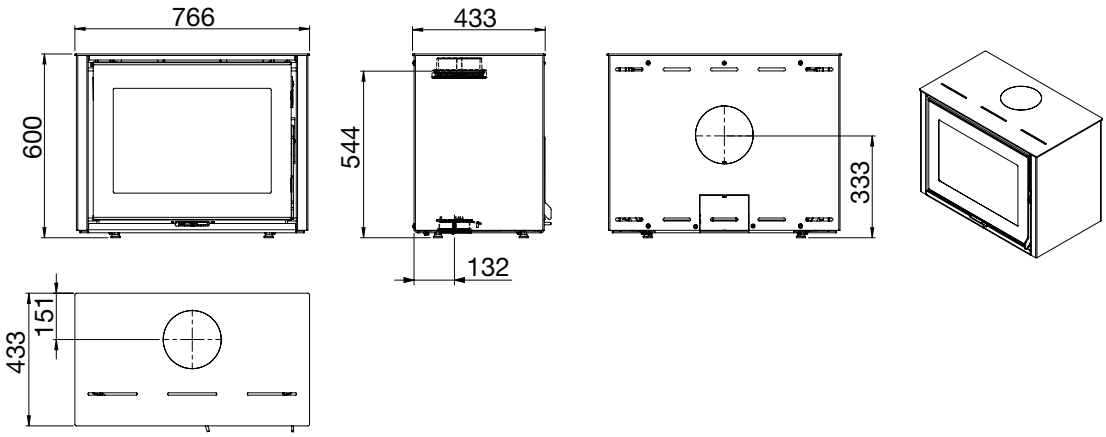

Scan-Line 95 H

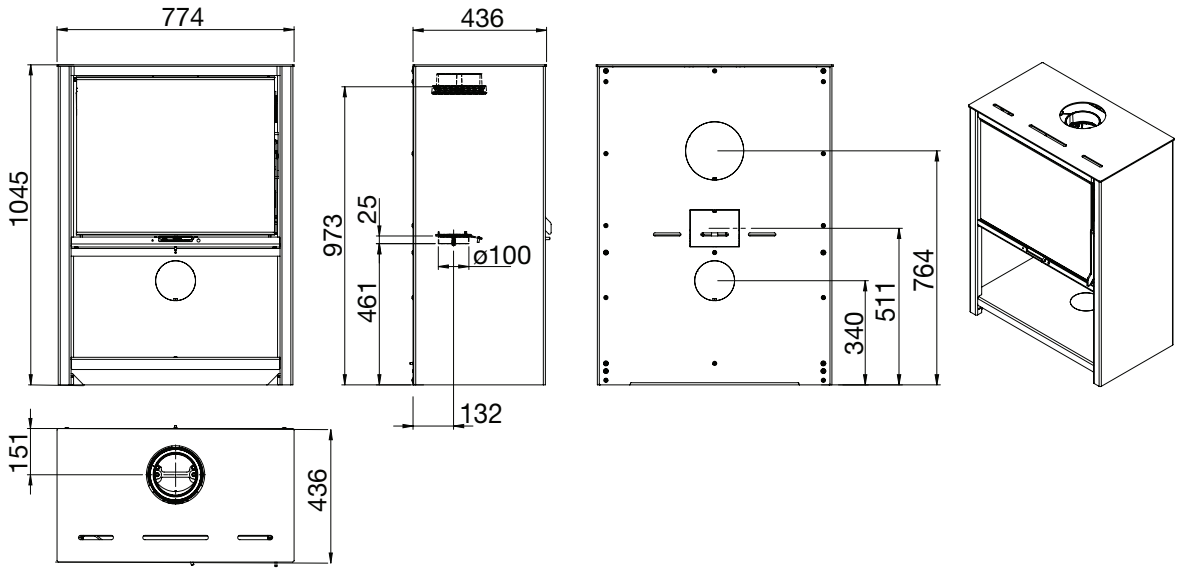

Scan-Line 95 Fixed pedestal

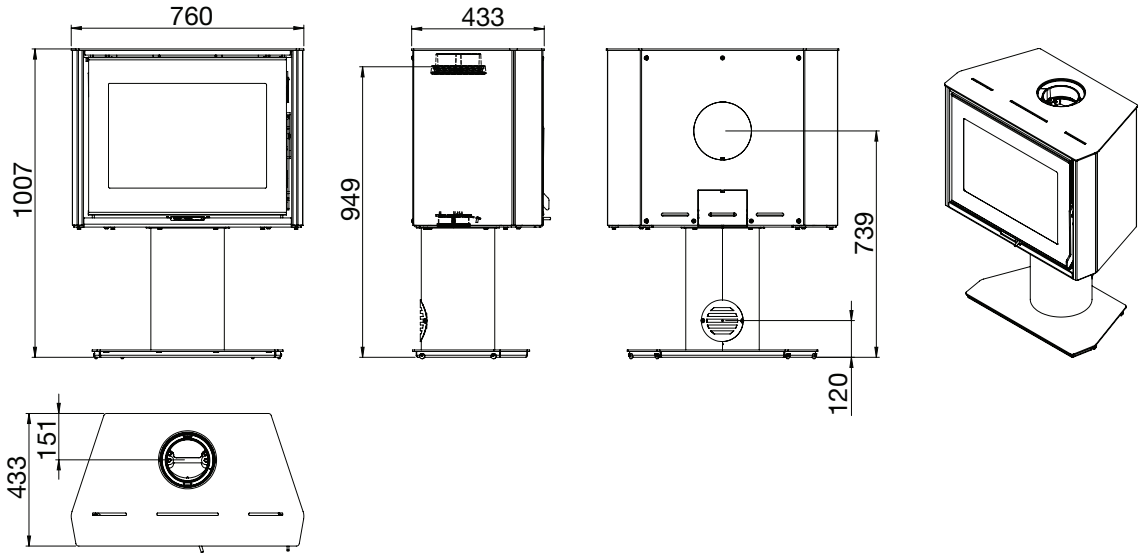

Scan-Line 95 Rotating pedestal

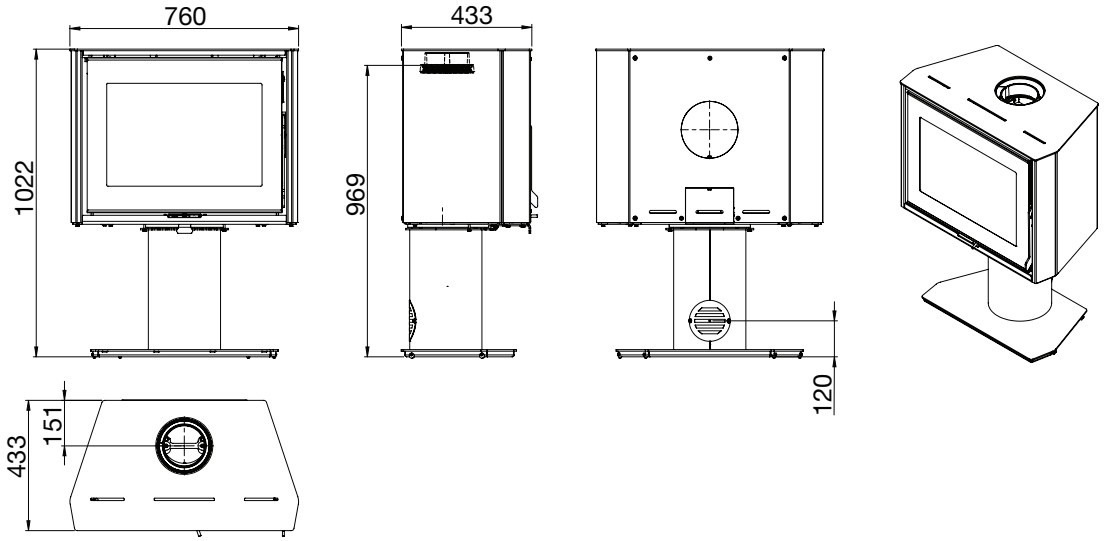

Scan-Line 100

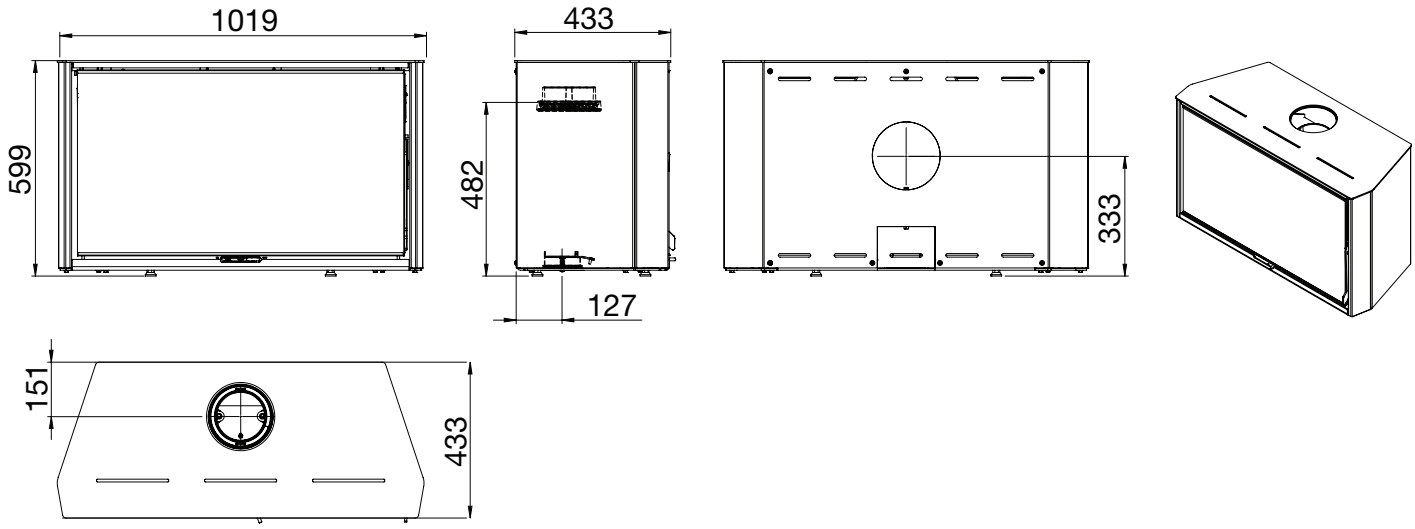

Scan-Line 100 Fixed pedestal

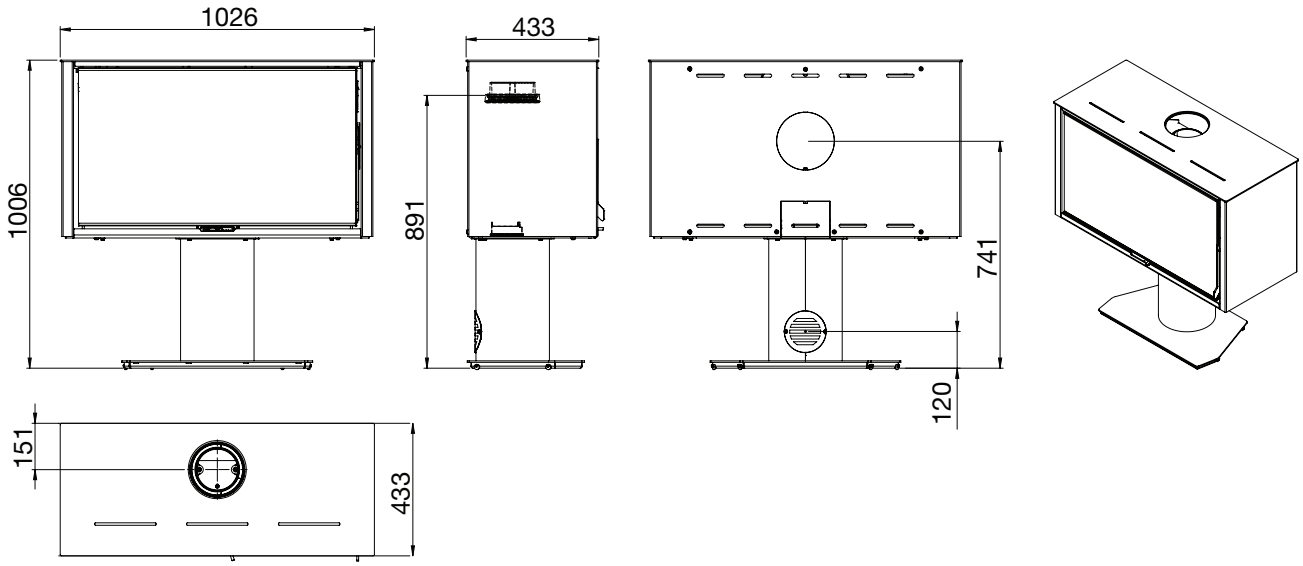

Scan-Line 100 Rotating pedestal

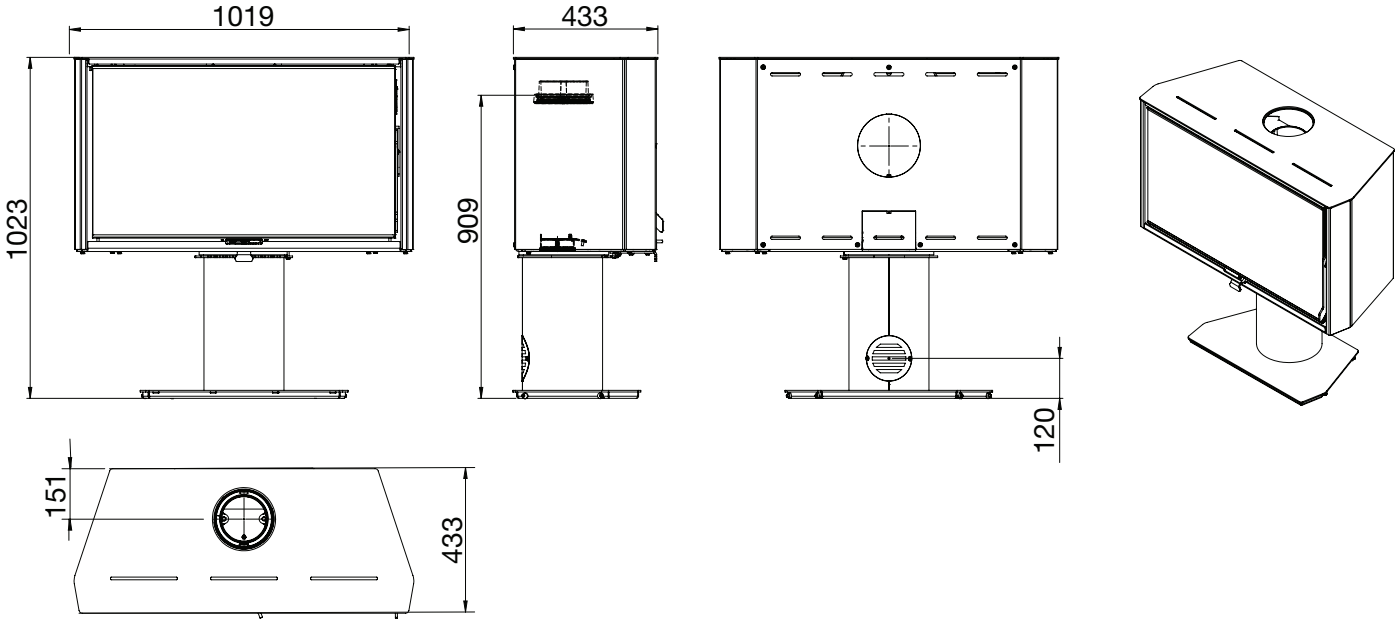

Scan-Line 100 R

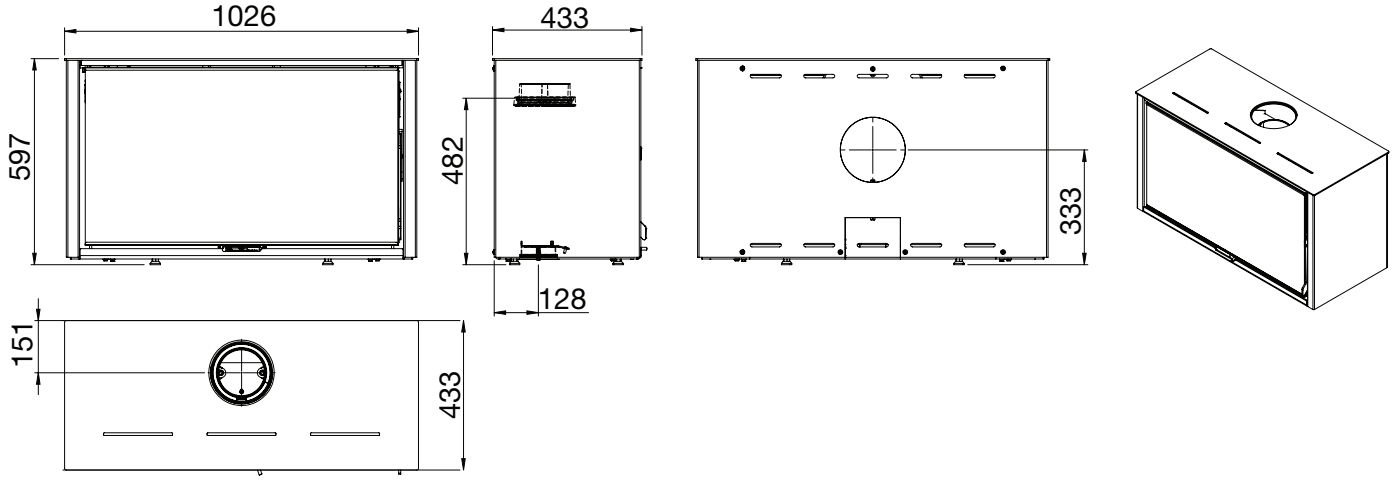

Scan-Line 100 R Fixed pedestal

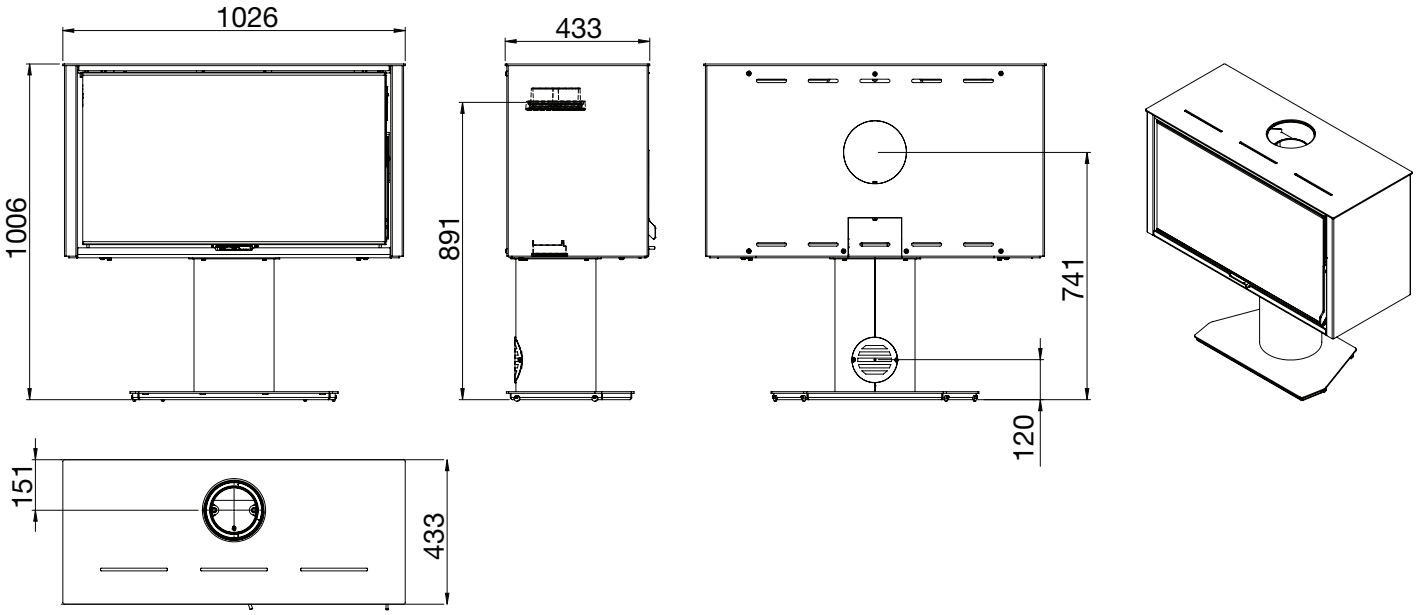

Scan-Line 100 R Rotating pedestal

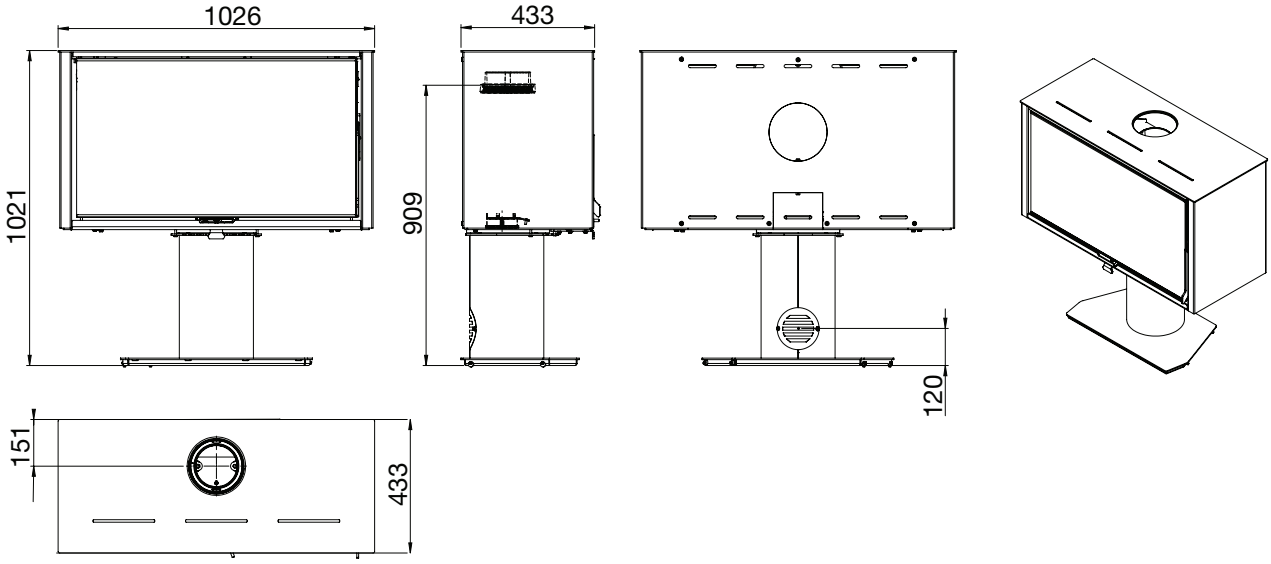

2.6 External fresh air - Accessory

Pedestal models

Scan-Line 95 Fixed pedestal
Scan-Line 95 Rotating pedestal
Scan-Line 100 Fixed pedestal
Scan-Line 100 Rotating pedestal
Scan-Line 100 R Fixed pedestal
Scan-Line 100 R Rotating pedestal

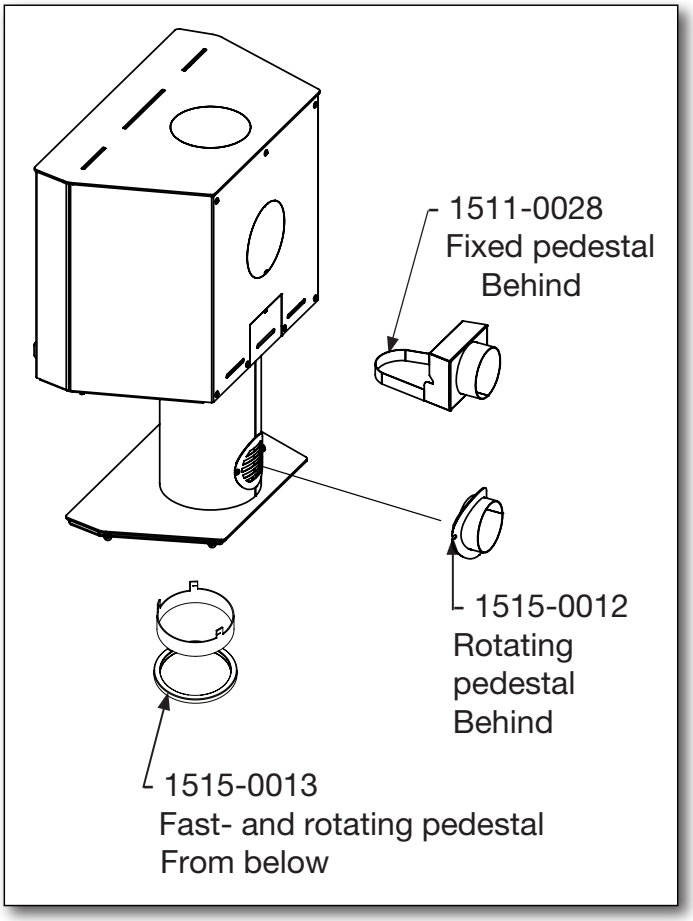

Models without pedestal

Scan-Line 95
Scan-Line 95 R
Scan-Line 100
Scan-Line 100 R

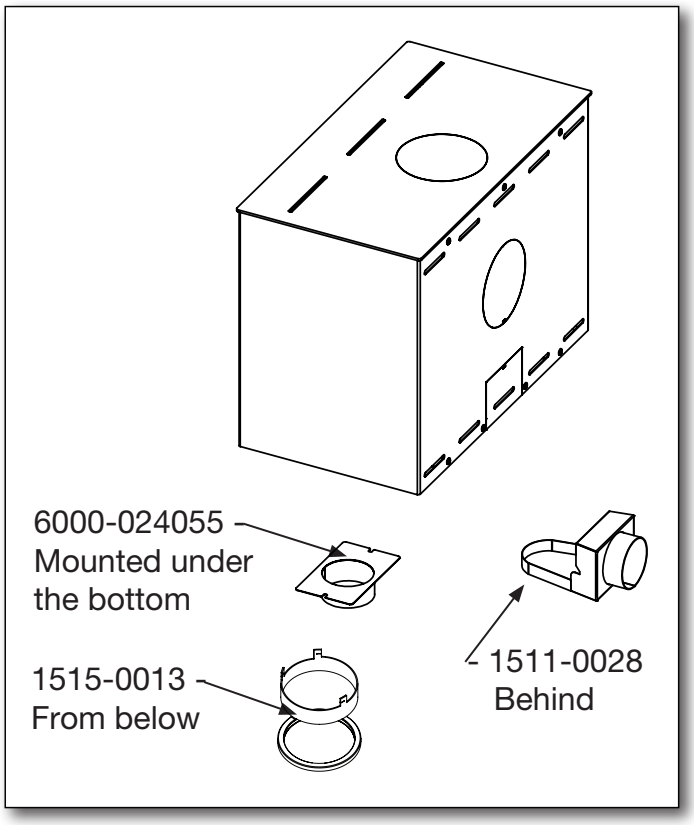

Scan-Line 95 H

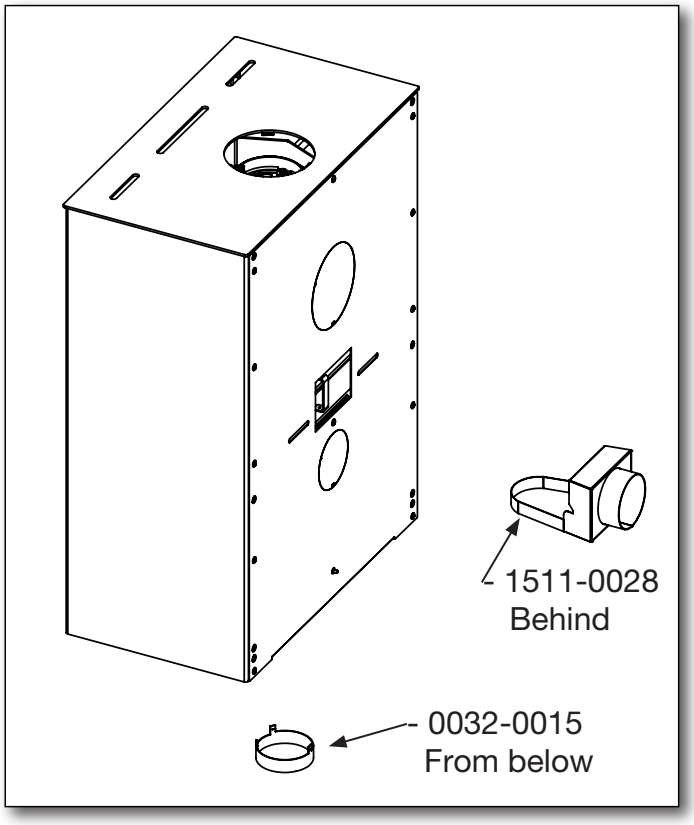

2.7 Connecting external fresh air supply from below

Remove the vermiculite in the combustion chamber. See on page 11.

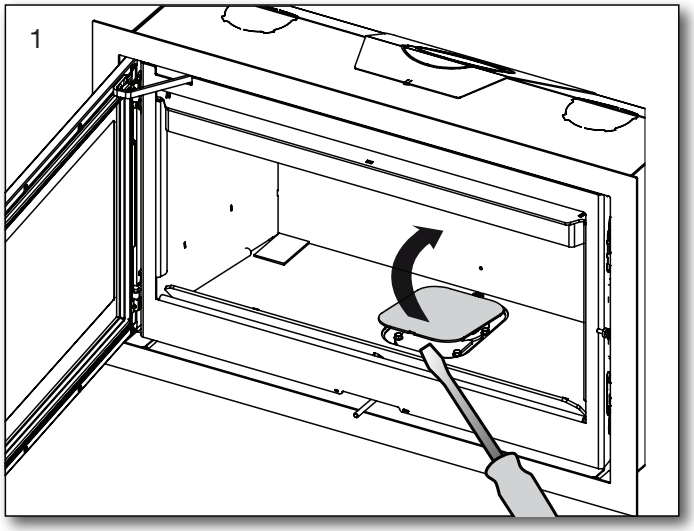

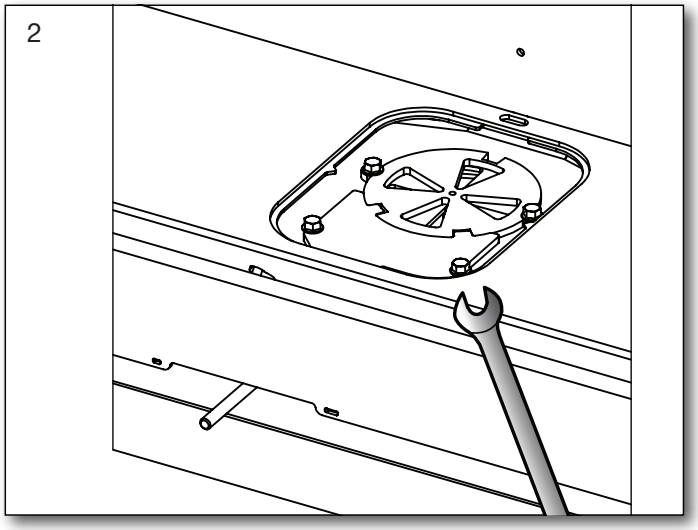

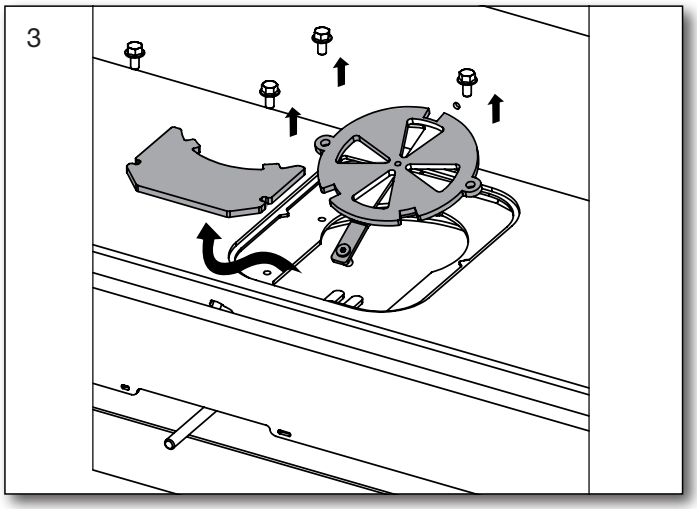

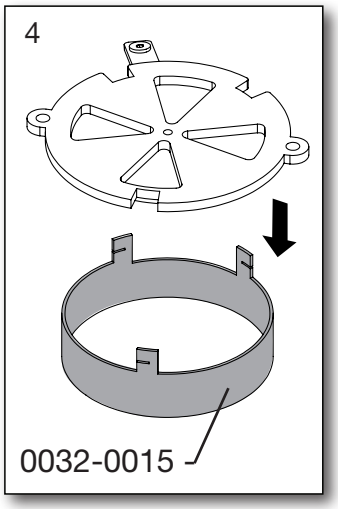

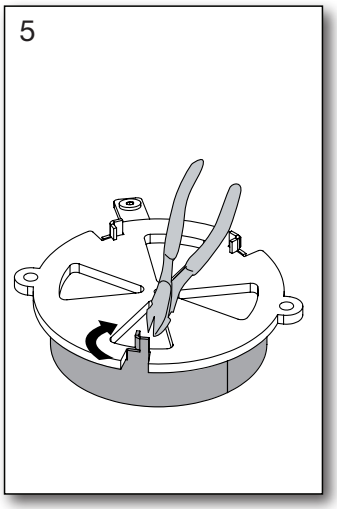

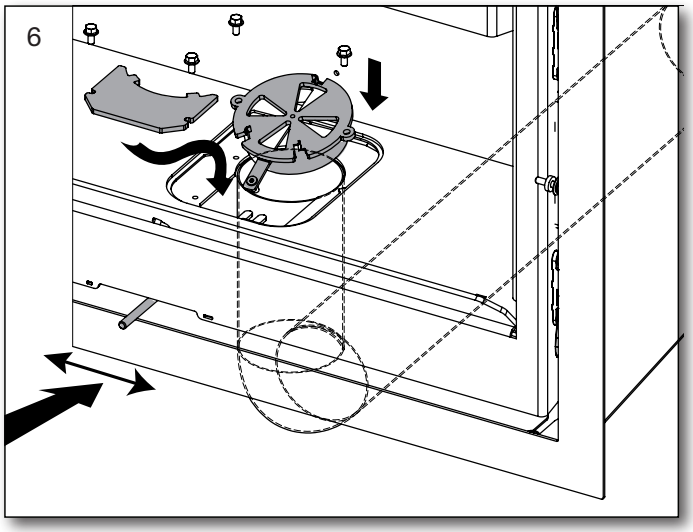

Check that the air controller moves freely.

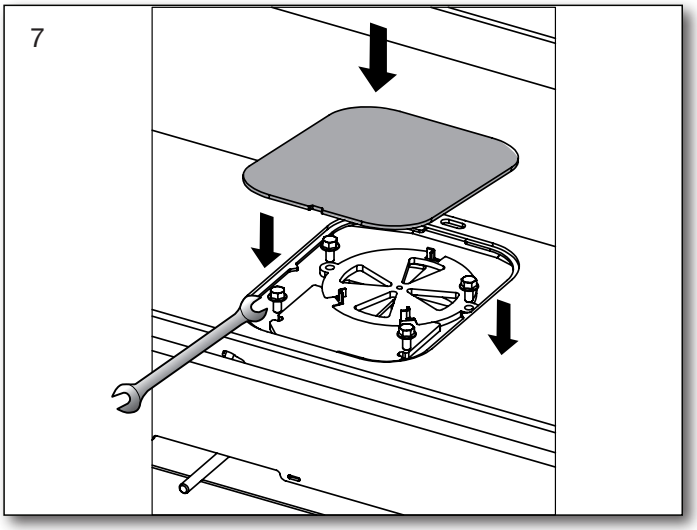

Replace the vermiculite. See page 11.

2.8 Changing to a back outlet

Back outlet is not an option for models with rotating pedestal.

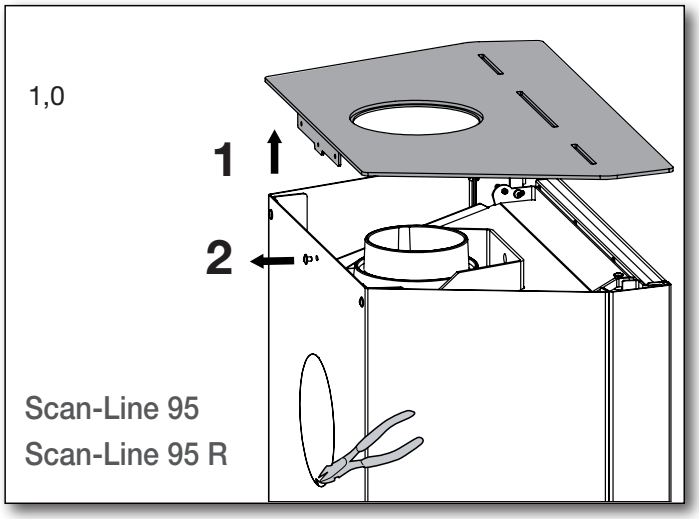

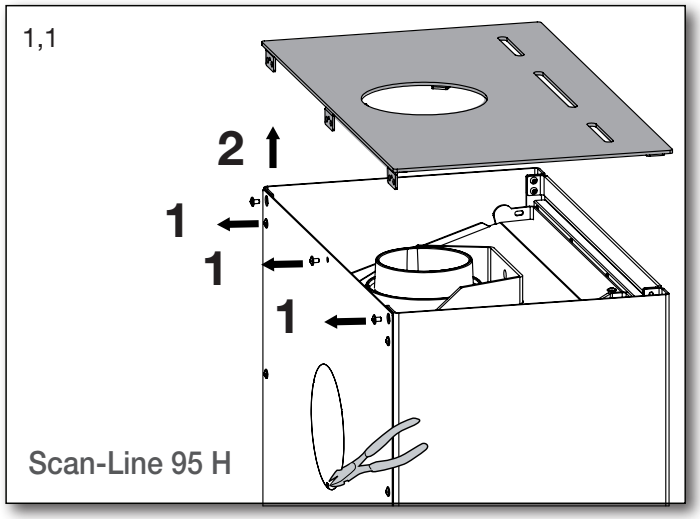

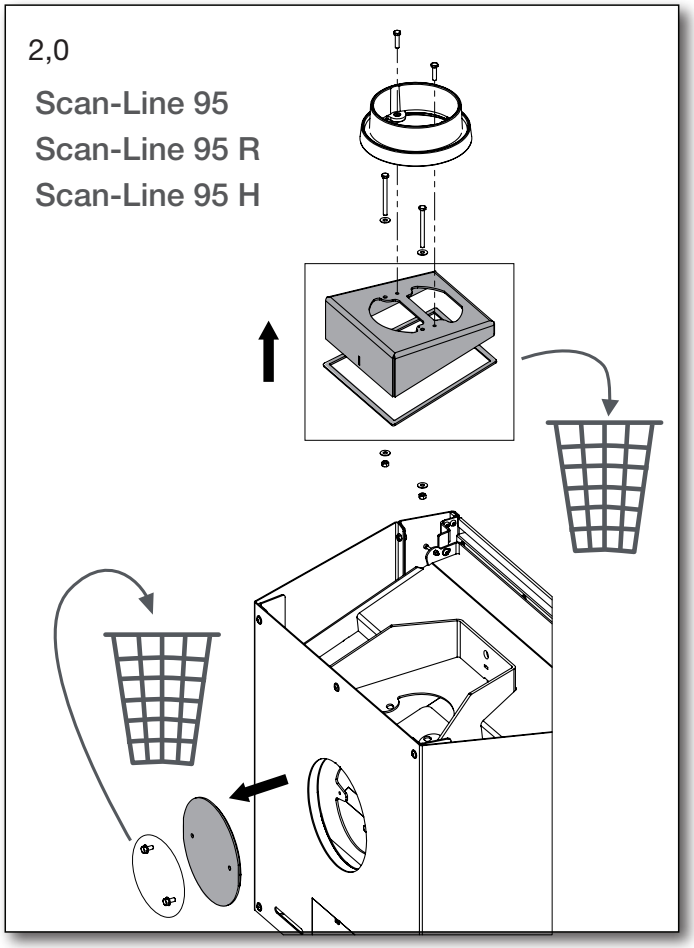

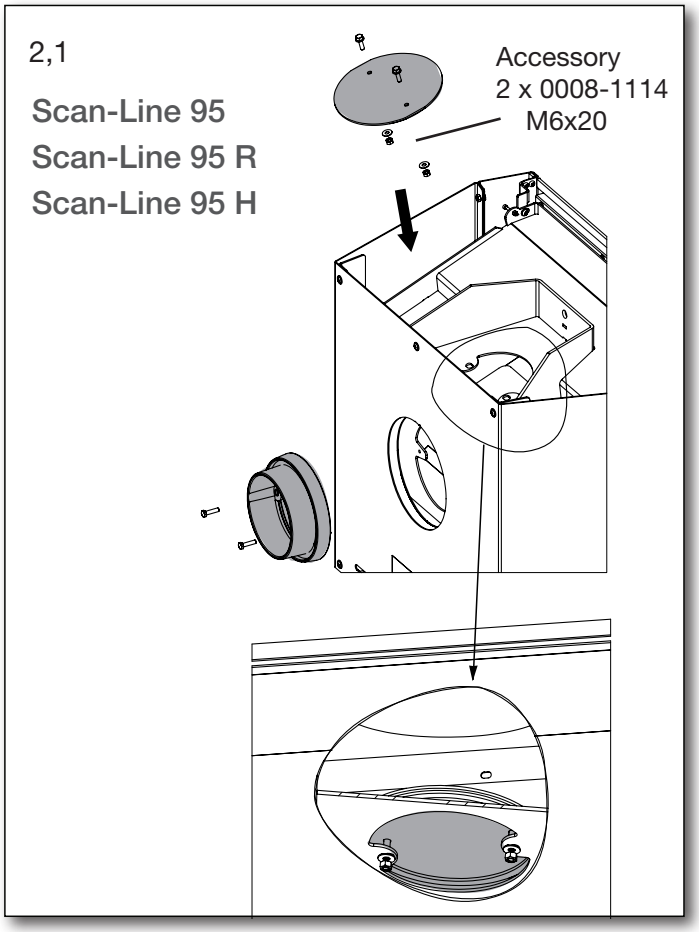

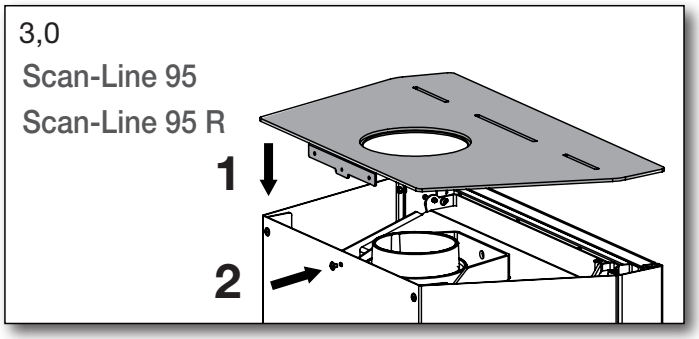

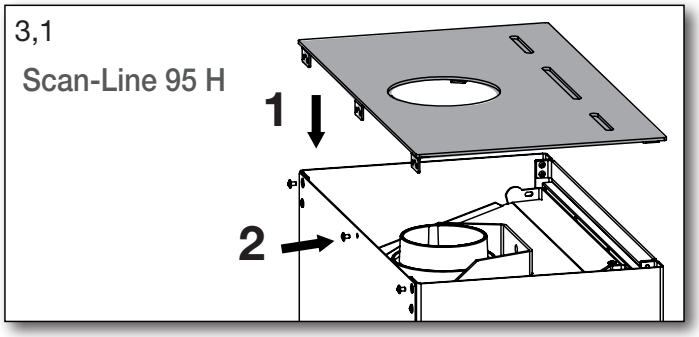

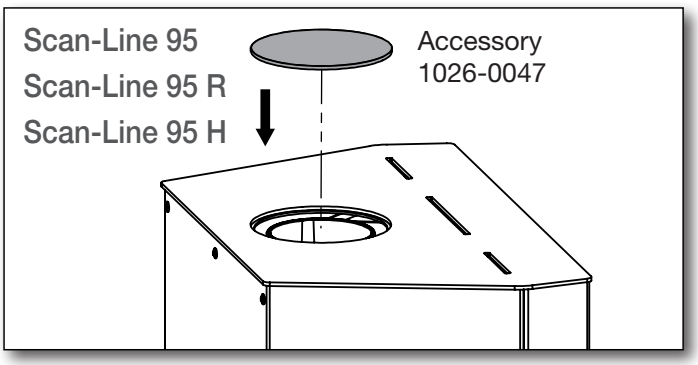

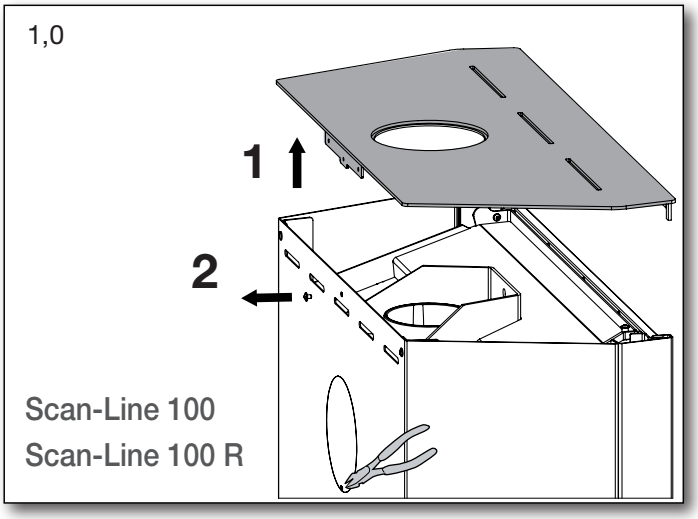
1,0
1
2
Scan-Line 100
Scan-Line 100 R

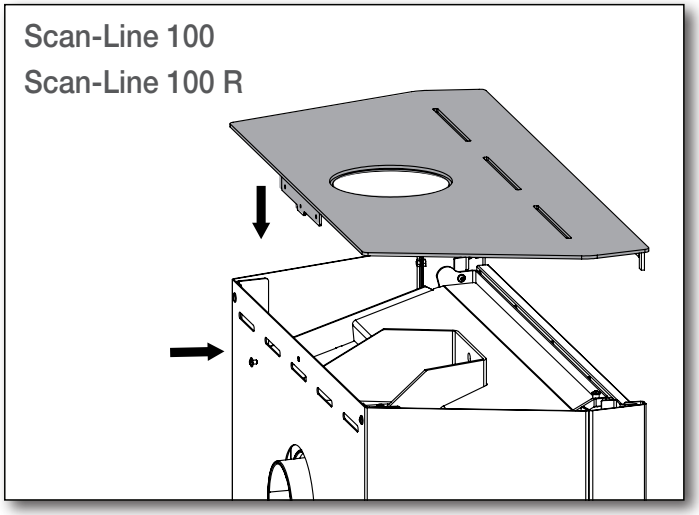
Scan-Line 100
Scan-Line 100 R

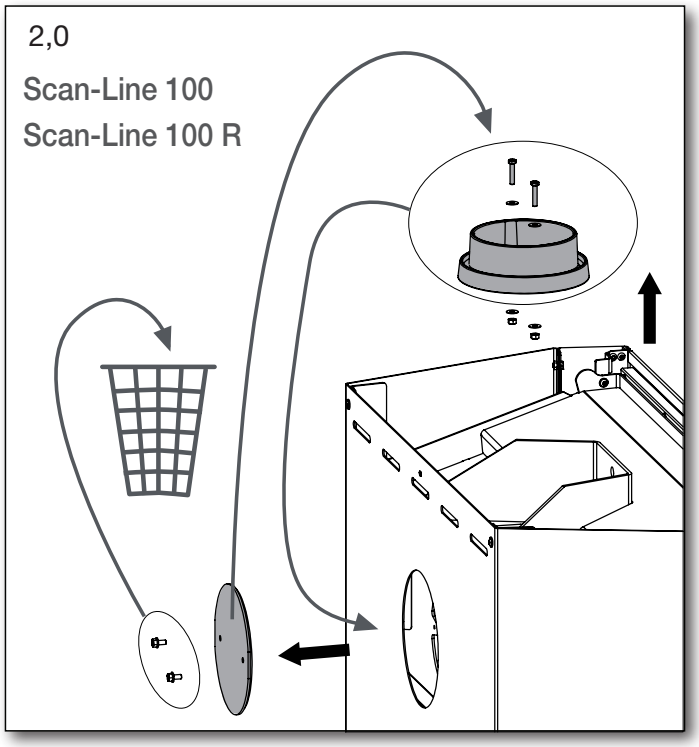
2,0
Scan-Line 100
Scan-Line 100 R

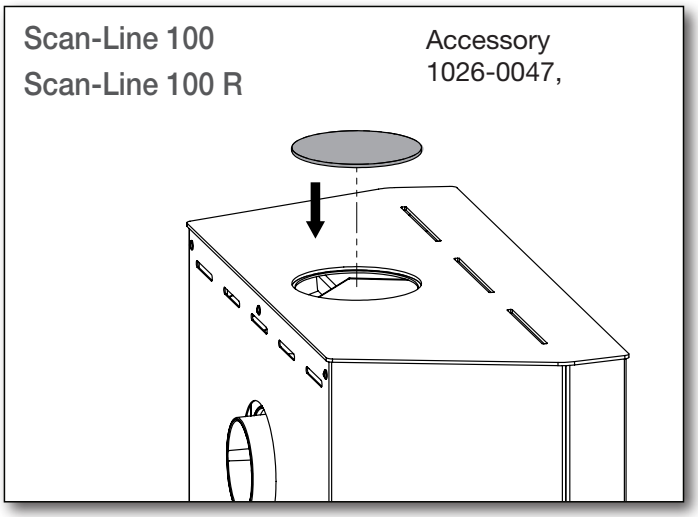
Scan-Line 100
Scan-Line 100 R
Accessory
1026-0047,

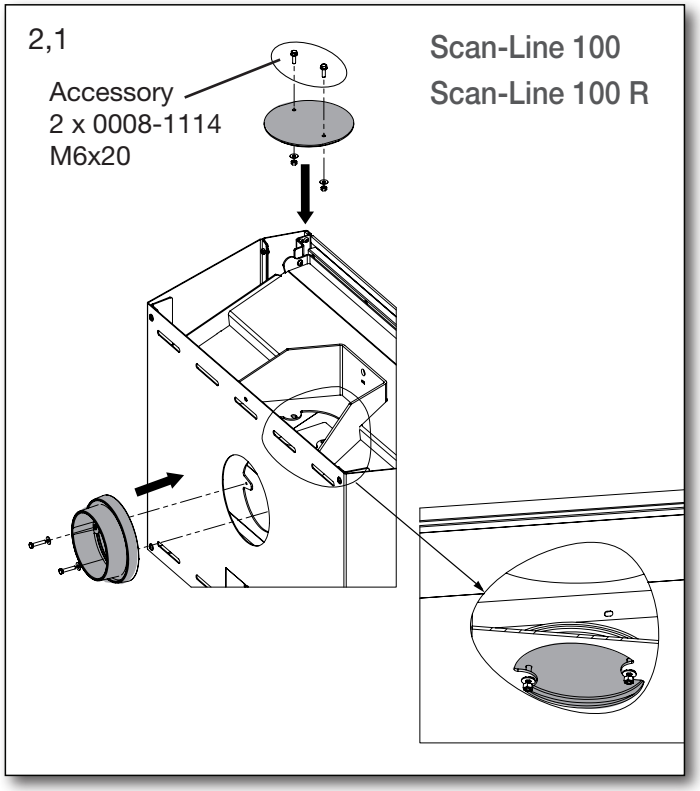
2,1
Accessory
2 x 0008-1114
M6x20
Scan-Line 100
Scan-Line 100 R

2.9 Connecting external air supply from behind

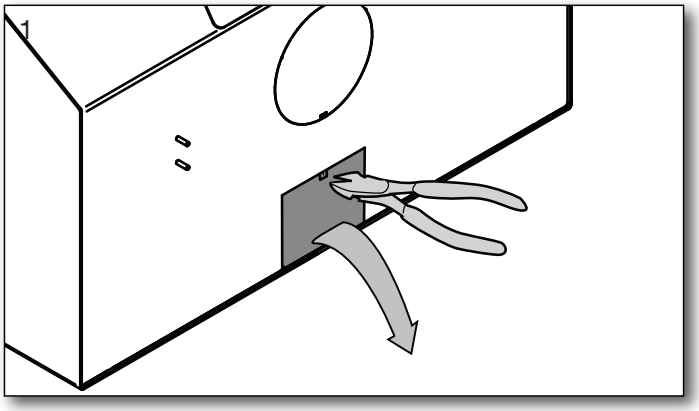

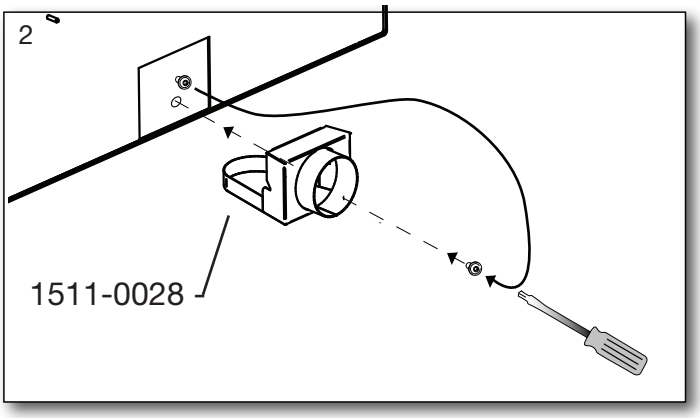

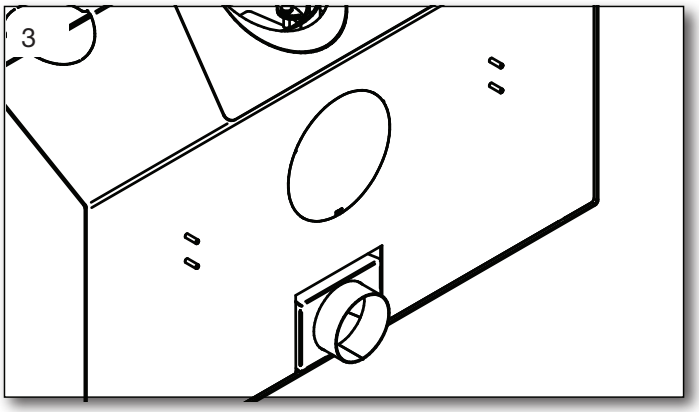

Possibly leakage around the coupling spigot can be sealed with heat resistant silicone or fire rope.

2.10 Clearances for installation EN 13240 Scan-Line 95 Serie

The Building materials that are used in safety test and shown in illustrations on this page, has a thermal conductivity of max. (= <0.36 W (m * K)

Stove type Scan-Line Series Minimum dimensions in mm	Distance combustible material Insulated/uninsulated flue pipe								
	A (dR) Behind the oven	B (ds!) At the side	C (dP) To furniture	D (dS!) Corner distance	E (dB!) From door edge to floor *	F(dC) Above the oven (ceiling)	Above oven (Shelf)	(dB) Under thr oven	(dF) In front of the oven floor
Scan-Line 95 Without pedestal	75/100	350/350	1100/1100	350/350	350	750	N/A	0(<65K)	0(<65K)
Scan-Line 95 Fixed pedestal	75/150	350/350	1100/1100	350/350	350	750	N/A	0(<65K)	0(<65K)
Scan-Line 95 Rotating pedestal	220/295	855/855	1100/1100	433/433	350	750	N/A	0(<65K)	0(<65K)
Scan-Line 95 R Without pedestal	75/150	350/350	1100/1100	350/350	350	750	N/A	0(<65K)	0(<65K)
Scan-Line 95 H	75/150	350/350	1100/1100	350/350	350	750	N/A	0(<65K)	0(<65K)

* If E is below 350 the floor material must comply with the European standard for fire safety A2-s1,d0

Scan-Line 95
Without pedestal

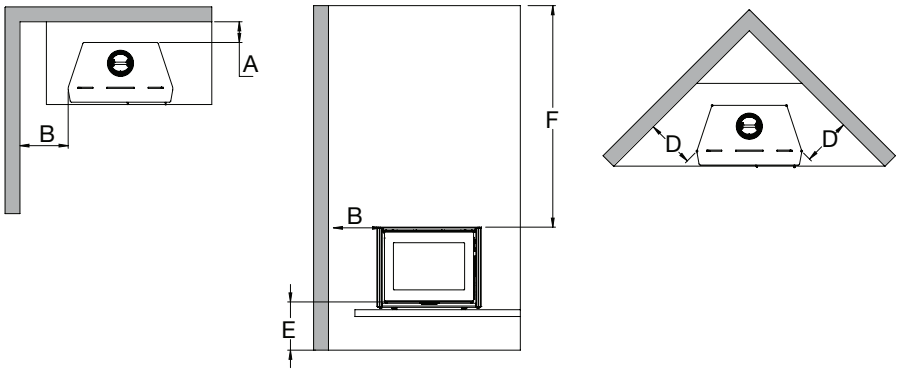

Scan-Line 95
Fixed pedestal

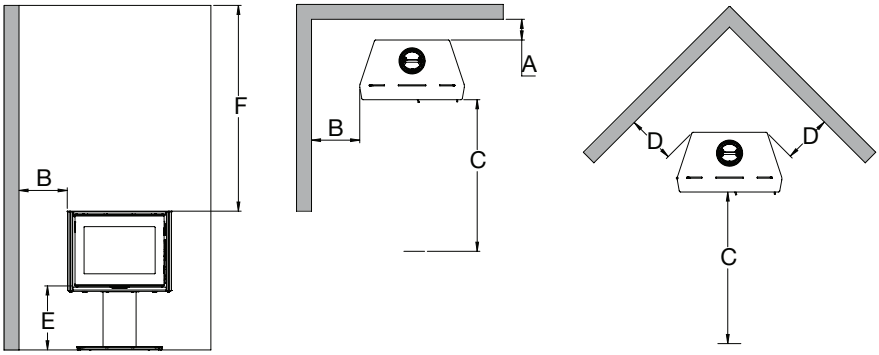

Scan-Line 95 Rotating pedestal

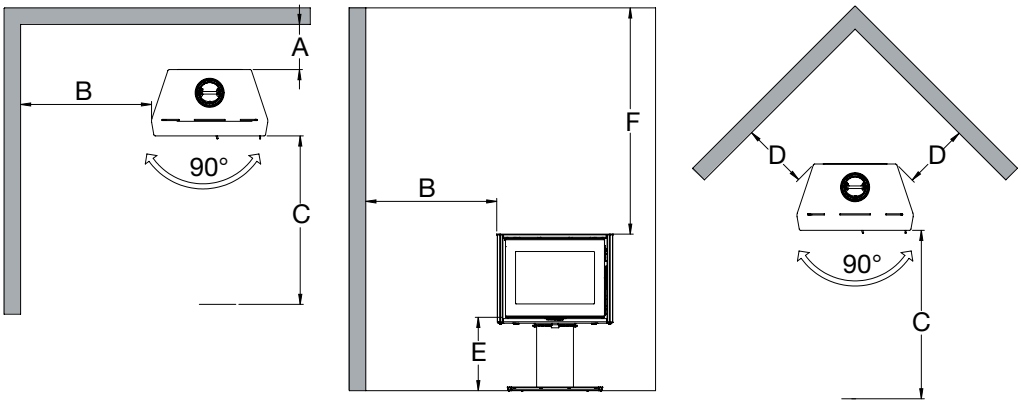

Scan-Line 95 R Without pedestal

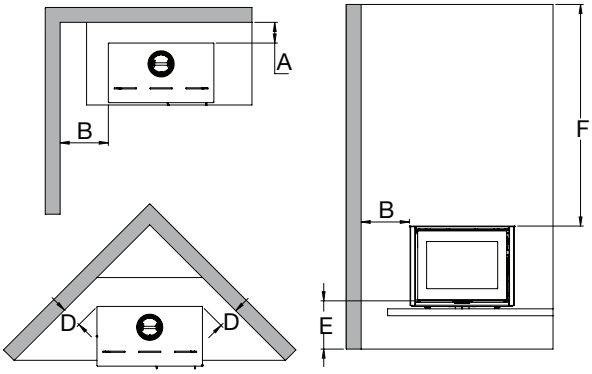

Scan-Line 95 H

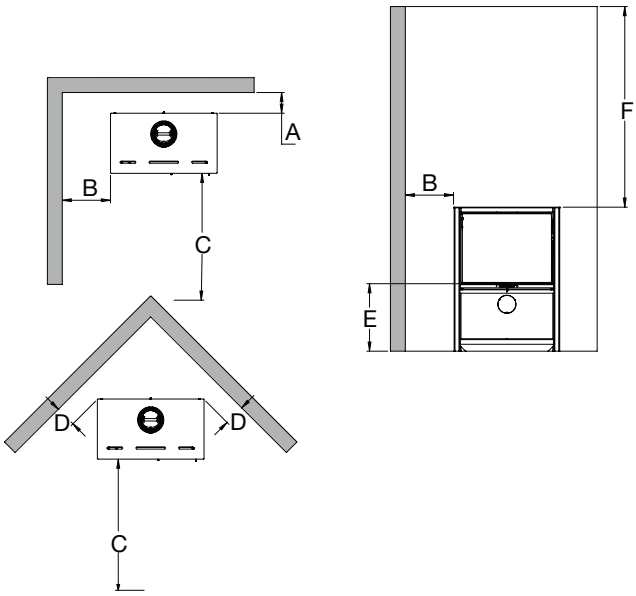

2.11 Clearances for installation EN 13240 Scan-Line 100 Serie

The Building materials that are used in safety test and shown in illustrations on this page, has a thermal conductivity of max. (= <0.36 W (m * K)

Stove type Scan-Line Series Minimum dimensions in mm	Distance combustible material Insulated/uninsulated flue pipe								
	A (dR) Behind the oven	B (ds!) At the side	C (dP) To furniture	D (dS!) Corner distance	E (dB!) From door edge to floor *	F(dC) Above the oven (ceiling)	Above oven (Shelf)	(dB) Under thr oven	(dF) In front of the oven floor
Scan-Line 100 Without pedestal	100	250	1200	250	350	750	N/A	0(<65K)	0(<65K)
Scan-Line 100 Fixed pedestal	100	250	1200	250	350	750	N/A	0(<65K)	0(<65K)
Scan-Line 100 Rotating pedestal	337	830	1200	372	350	750	N/A	0(<65K)	0(<65K)
Scan-Line 100 R Without pedestal	100	250	1200	250	350	750	N/A	0(<65K)	0(<65K)
Scan-Line 100 R Fixed pedestal	100	250	1200	250	350	750	N/A	0(<65K)	0(<65K)
Scan-Line 100 R Rotating pedestal	416	830	1200	295	350	750	N/A	0(<65K)	0(<65K)

* If E is below 350 the floor material must comply with the European standard for fire safety A2-s1,d0

Scan-Line 100
Without pedestal

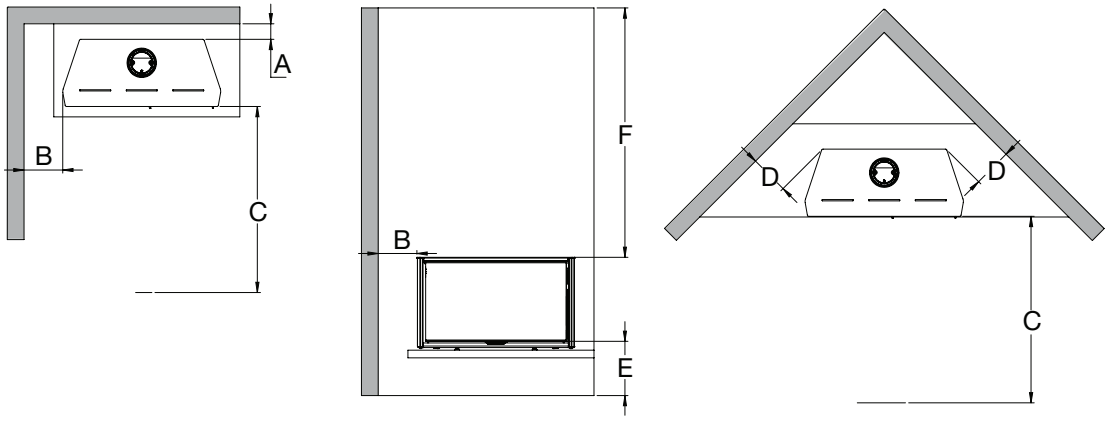

Scan-Line 100
Fixed pedestal

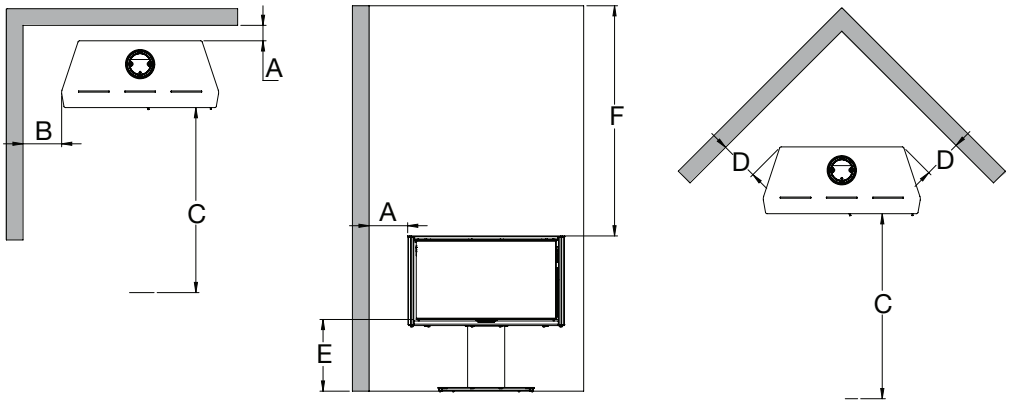

Scan-Line 100
Rotating pedestal

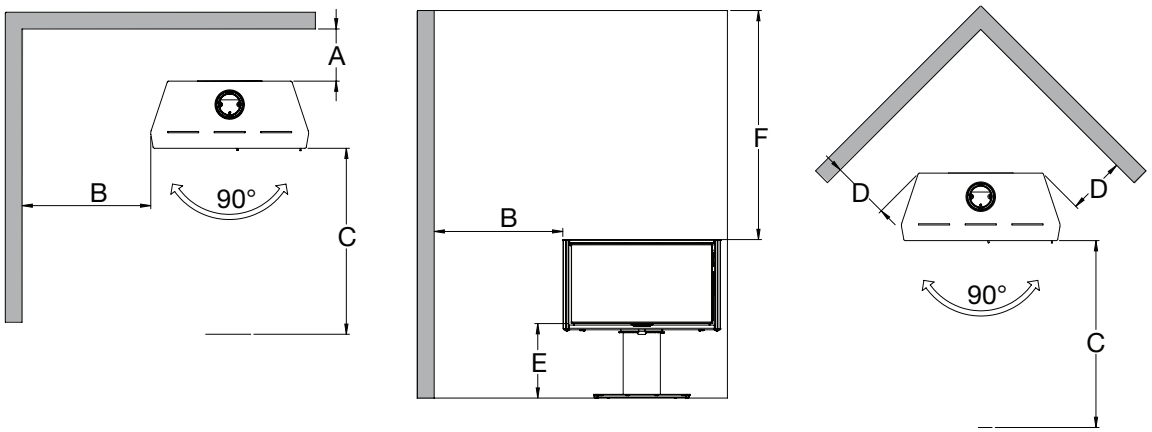

Scan-Line 100 R
Without pedestal

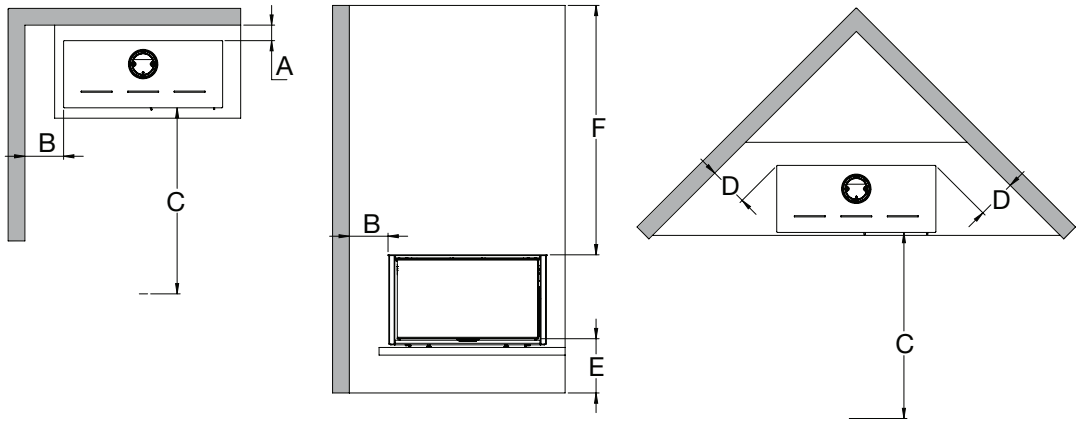

Scan-Line 100 R
Fixed pedestal

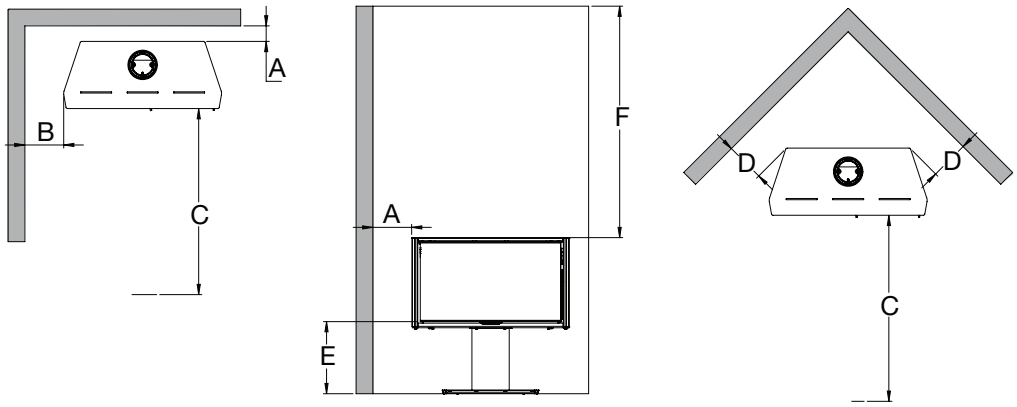

Scan-Line 100 R
Rotating pedestal

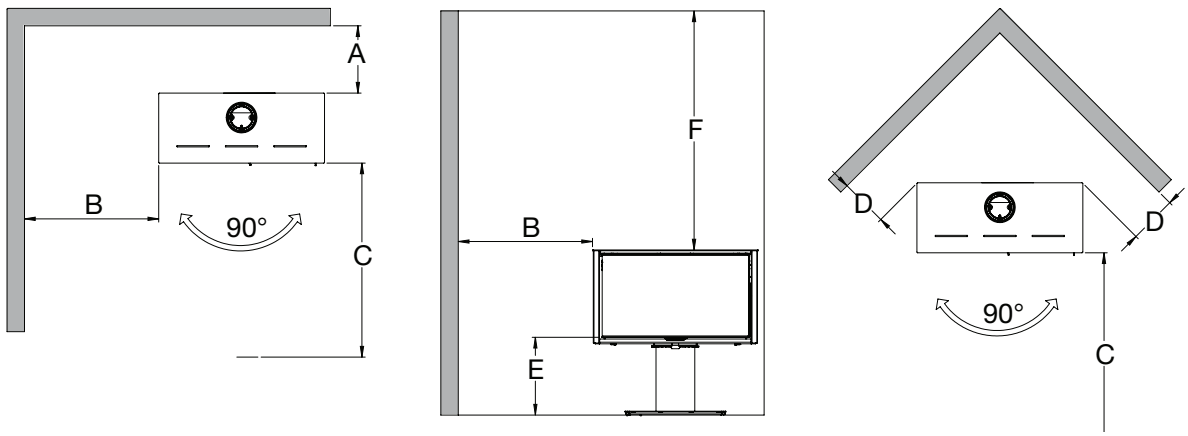

Appendix A

The Clean Air Act 1993 and Smoke Control Areas Under the Clean Air Act local authorities may declare the whole or part of the district of the authority to be a smoke control area. It is an offence to emit smoke from a chimney of a building, from a furnace or from any fixed boiler if located in a designated smoke control area. It is also an offence to acquire an ”unauthorised fuel” for use within a smoke control area unless it is used in an ”exempt” appliance (”exempted” from the controls which generally apply in the smoke control area).

The Secretary of State for Environment, Food and Rural Affairs has powers under the Act to authorise smokeless fuels or exempt appliances for use in smoke control areas in England. In Scotland and Wales this power rests with Ministers in the devolved administrations for those countries. Separate legislation, the Clean Air (Northern Ireland) Order 1981, applies in Northern Ireland. Therefore it is a requirement that fuels burnt or obtained for use in smoke control areas have been ”authorised” in Regulations and that appliances used to burn solid fuel in those areas (other than ”authorised” fuels) have been exempted by an Order made and signed by the Secretary of State or Minister in the devolved administrations.

The Scan-Line 95-100 have been recommended as suitable for use in smoke control areas when burning dry wood logs.

Further information on the requirements of the Clean Air Act can be found here: https://www.gov.uk/ smoke-control-area-rules

Your local authority is responsible for implementing the Clean Air Act 1993 including designation and supervision of smoke control areas and you can contact them for details of Clean Air Act requirements.

Certifikat no. 1554 **GB**

Ecodesign
EU Declaration of Conformity

DoC Scan-Line 95 1554-2014

Product fiche

Manufacturer	Heta A/S
Adress	Jupitervej 22, DK 7620 Lemvig
E-mail	heta@heta.dk
Website	www.heta.dk
Telephone	+45 9663 0600

Model identifier	Scan-Line 95

The identified product described above is in conformity with:
The relevant EU harmonized regulations:
DIR 2009/125/EF
REG (EU) 2015/1185
REG (EU) 2015/1186
REG (EU) 2017/1369
REG (EU) 305/2011
The relevant harmonized standards
EN 13240:2001/A1:2003/A2:2004
CEN/TS 15883:2010

Notified body relevant to the assessment and verification of constancy of performance
Danish Technological Institute, DK-8000 Aarhus No. 1235. Report no. 300-ELAB-1554-EN II

Characteristics when operating with the preferred fuel only		
Heat output		
Item	**Symbol**	**Value/Unit**
Nominal heat output	P_{nom}	7,2 kW
Minimum heat output	P_{min}	
Useful efficiency (NCV as received)		
Useful efficiency at nominal heat output	$\eta_{th,\ nom}$	80%
Useful efficiency at minimum heat output	$\eta_{th,\ min}$	
Auxiliary electricity consumption		
At nominal heat output	el_{max}	- kW
At minimum heat output	el_{min}	- kW
In standby mode	el_{SB}	- kW

Fuel	**Preferred fuel**	**Other suitable fuel**
Wood logs with moisture content ≤ 25 %	Yes	No
Compressed wood with moisture content < 12 %	No	No
Other woody biomass	No	No
Non-woody biomass	No	No
Anthracite and dry steam coal	No	No
Hard coke	No	No
Low temperature coke	No	No
Bituminous coal	No	No
Lignite briquettes	No	No
Peat briquettes	No	No
Blended fossil fuel briquettes	No	No
Blended biomass and fossil fuel briquettes	No	No
Other blend of biomass and solid fuel	No	No

Emissions at nominal heat output	η_s %	mg/Nm³ (13 % O_2)			
		PM	**OGC**	**CO**	**NO_x**
	≥ 65	≤ 40	≤ 120	≤ 1500	≤ 200
	70	28	55	1120	106

Type of heat output/room temperature control	
single stage heat output, no room temperature control	Yes
two or more manual stages, no room temperature control	No
with electronic room temperature contro	No
with electronic room temperature control	No
with electronic room temperature control plus day timer	No
with electronic room temperature control plus week timer	No

Technical documentation	
Indirect heating functionality:	No
Direct heat output:	7,2 kW
Energy Efficiency Index (EEI):	EEI 106
Fluegas temperature at nominal heat output	T 273°C
Energy efficiency class	A

Other control options	
room temperature control, with presence detection	No
room temperature control, with open window detection	No
with distance control option	No

Safty	
Reaction to fire	A1
Test of fire safety in connection with the burning of wood	Approved
Distance to combustible materials Rear. Without insulation / with insulation (dR) Sides distance to combustible materials (dS) Furniture distance (dP)	Minimum distances in mm # # 1100

See Clearances for installation in instructions

Signed on behalf the manufacturer of **28.01.2025**

HETA
Jupitervej 22, DK-7620 Lemvig
TLF: +45 96 63 06 00
Martin Bach

The chimney sweep's signature Date_____

_____
Signature

Certifikat no. 1553 **GB**

Ecodesign
EU Declaration of Conformity

DoC Scan-Line 100 1553-2011

Product fiche

Manufacturer	Heta A/S
Adress	Jupitervej 22, DK 7620 Lemvig
E-mail	heta@heta.dk
Website	www.heta.dk
Telephone	+45 9663 0600

Model identifier	Scan-Line 100

The identified product described above is in conformity with:
The relevant EU harmonized regulations:
DIR 2009/125/EF
REG (EU) 2015/1185
REG (EU) 2015/1186
REG (EU) 2017/1369
REG (EU) 305/2011
The relevant harmonized standards
EN 13240:2001/A1:2003/A2:2004
CEN/TS 15883:2010

Notified body relevant to the assessment and verification of constancy of performance
Danish Technological Institute, DK-8000 Aarhus No. 1235. Report no. 300-ELAB-1553-EN

Characteristics when operating with the preferred fuel only		
Heat output		
Item	**Symbol**	**Value/Unit**
Nominal heat output	P_{nom}	9,9 kW
Minimum heat output	P_{min}	
Useful efficiency (NCV as received)		
Useful efficiency at nominal heat output	$\eta_{th, nom}$	81%
Useful efficiency at minimum heat output	$\eta_{th, min}$	
Auxiliary electricity consumption		
At nominal heat output	el_{max}	- kW
At minimum heat output	el_{min}	- kW
In standby mode	el_{SB}	- kW

Fuel	**Preferred fuel**	**Other suitable fuel**
Wood logs with moisture content ≤ 25 %	Yes	No
Compressed wood with moisture content < 12 %	No	No
Other woody biomass	No	No
Non-woody biomass	No	No
Anthracite and dry steam coal	No	No
Hard coke	No	No
Low temperature coke	No	No
Bituminous coal	No	No
Lignite briquettes	No	No
Peat briquettes	No	No
Blended fossil fuel briquettes	No	No
Blended biomass and fossil fuel briquettes	No	No
Other blend of biomass and solid fuel	No	No

Emissions at nominal heat output	η_s %	mg/Nm³ (13 % O_2)			
		PM	**OGC**	**CO**	**NO_x**
	≥ 65	≤ 40	≤ 120	≤ 1500	≤ 200
	71	15	104	1315	95

Type of heat output/room temperature control	
single stage heat output, no room temperature control	Yes
two or more manual stages, no room temperature control	No
with electronic room temperature contro	No
with electronic room temperature control	No
with electronic room temperature control plus day timer	No
with electronic room temperature control plus week timer	No

Technical documentation	
Indirect heating functionality:	No
Direct heat output:	9,9 kW
Energy Efficiency Index (EEI):	EEI 107
Flue gas outlet temperature	329°C
Energy efficiency class	A+

Other control options	
room temperature control, with presence detection	No
room temperature control, with open window detection	No
with distance control option	No

Safty	
Reaction to fire	A1
Test of fire safety in connection with the burning of wood	Approved
Distance to combustible materials Rear. Without insulation / with insulation (dR) Sides distance to combustible materials (dS) Furniture distance (dP)	Minimum distances in mm # # 1200

See Clearances for installation in instructions

Signed on behalf the manufacturer of **14.01.2025**

HETA
Jupitervej 22, DK-7620 Lemvig
TLF: +45 96 63 06 00
Martin Bach

The chimney sweep's signature Date_____

_____
Signature